REV.	ECN NO OR DESCRIPTION	REVISED	DATE
A	PDR NO.:S131028-5A	Harlen	2014.04.07

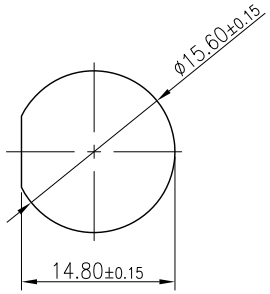

RECOMMENDED PANEL CUT-OUT

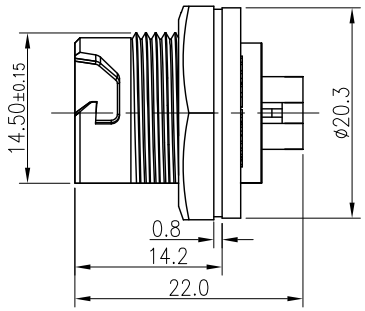

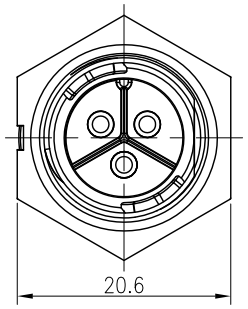

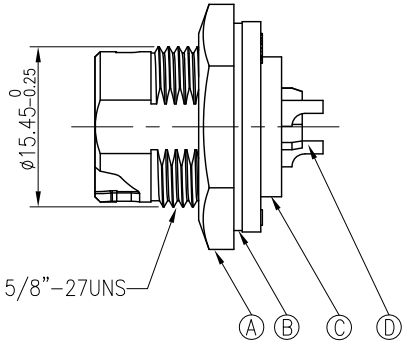

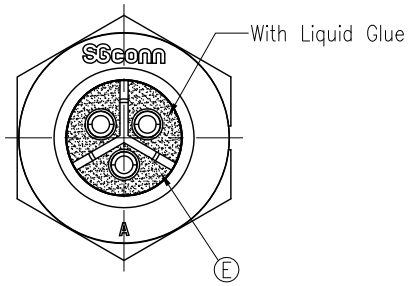

NOTES:
1. ELECTRICAL CHARACTERISTICS:
   1-1 CURRENT RATING: 10A.
   1-2 CONTACT RESISTANCE: 30 mOhm Max.
   1-3 INSULATION RESISTANCE: 100 MOhm Min at 500VDC.
   1-4 BREAKDOWN VOLTAGE: 1000VAC PER MINUTE
2. MECHANICAL CHARACTERISTICS:
   2-1 TIGHTENING TORQUES: 0.8~1.0Nm(7.08~8.85lbf.in.).
3. ENVIRONMENTAL:
   3-1 OPERATING TEMPERATURE: -40°C TO +105°C.
   3-2 SEALING REQUIREMENTS:IP67.
4. LIFE TEST: 1,000 CYCLES MIN.
5. FOR PANEL THICKNESS MAX OF 4.0mm
6. OTHER GENERAL SPEC TO REFER"QUICK SERIES GENERAL SPEC".
7. FOR TECHNICAL DATA REFER TO YOUR LOCAL SINGATRON ELECTRONICS SALES OFFICE.
8. ALL DIMENSIONS ARE NOMINAL FOR REFERENCE ONLY UNLESS OTHERWISE STATED.
9. TO CONFORM TO SINGATRON HAZARDOUS SUBSTANCE FREE SPEC.
10. GREEN PRODUCT IDENTIFICATION LABEL ON PACKAGING: G.P. PASS .

NO	DESCRIPTION	QTY	MATERIAL	PLATING & COLOR
E	LIQUID GLUE	1	N/A	BLACK
D	MALE PIN	*	BRASS	1~3u" GOLD PLATING OVER NICKEL PLATING
C	BODY	1	PA66	BLACK
B	GASKET	1	SILICONE	BLACK
A	NUT	1	PA66	BLACK

UNLESS OTHERWISE SPECIFED TOLERANCES

DECIMALS: X :±0.5, X.X :±0.3, X.XX :±0.2

ANGLES: X :±2°, X.X :±1°

Singatron Enterprise Co., Ltd.
信音企業股份有限公司

TITLE	QUICK SERIES STANDARD SIZE (SOLDER TYPE) MALE CONN. MALE PIN			
DWN	Harlen	PART NO.2QT3002-W03400H		
CHKD	JF	SCALE 2:1	UNIT: mm	
APVD	STEVE	SIZE: A3	SHEET:1 OF 1	REV:A

CUSTOMER COPY

文件編號:RD-06-043-A