REV.	ECN NO OR DESCRIPTION	REVISED	DATE
A	PDR NO.:S140610-1C	Harlen	2015.1.7
B	ECN NO.:S202312-R10	Elrod	2024.02.26

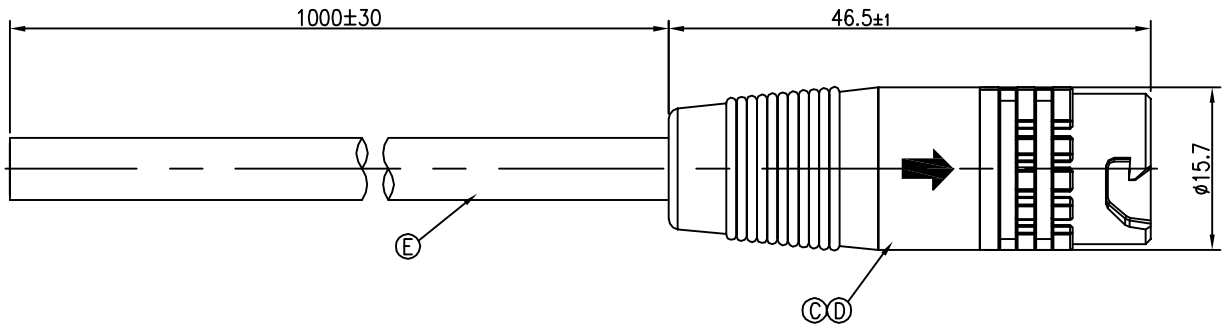

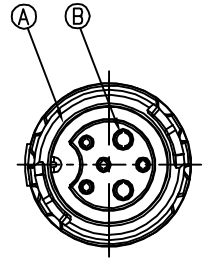

Conn.

WATERPROOF RATE: IP67

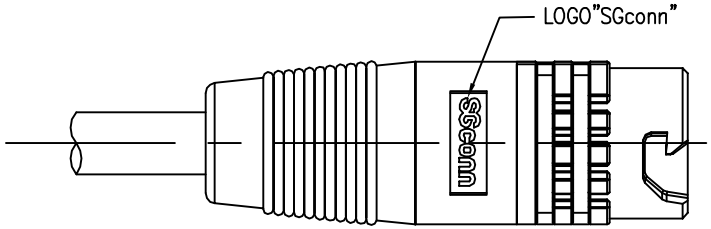

WIRE COLOR	CONN.
GREEN(24#)	6
YELLOW(24#)	5
RED(18#)	4
WHITE(24#)	3
BLACK(18#)	2
BLUE(24#)	1

PIN DEFINE

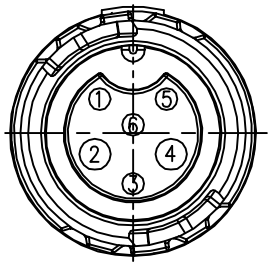

Pin Assignments

Front View

NOTES:
1. ELECTRICAL CHARACTERISTICS:
   1-1 CURRENT RATING: 10+5 AMPS.
   1-2 CONTACT RESISTANCE: 3 Ohm Max.
   1-3 INSULATION RESISTANCE: 100 MOhm Min. at 500VDC.
   1-4 BREAKDOWN VOLTAGE: 500VAC PER MINUTE.
2. ENVIRONMENTAL:
   2-1 OPERATING TEMPERATURE: -20°C TO +80°C.
   2-2 SEALING REQUIREMENTS: IP67.
3. LIFE TEST: 1,000 CYCLES MIN..
4. OTHER GENERAL SPEC TO REFER"QUICK SERIES GENERAL SPEC".
5. FOR TECHNICAL DATA REFER TO YOUR LOCAL SINGATRON ELECTRONICS SALES OFFICE.
6. ALL DIMENSIONS ARE NOMINAL FOR REFERENCE ONLY UNLESS OTHERWISE STATED.
7. TO CONFORM TO SINGATRON HAZARDOUS SUBSTANCE FREE SPEC.
8. GREEN PRODUCT IDENTIFICATION LABEL ON PACKAGING: G.P. PASS .

NO	DESCRIPTION	QTY	MATERIAL	PLATING & COLOR
E	CABLE	1	UL2464 24#*4C+ 18#*2C+AL OD 6.0 (UV RESISTANT)	BLACK (PVC JACKET)
D	INNER MOLD	1	PVC	BLACK
C	OVER MOLD	1	TPU	BLACK
B	FEMALE PIN	6	Phosphor Bronze	1~3u" GOLD PLATING OVER NICKEL PLATING
A	BODY	1	PA66	BLACK

UNLESS OTHERWISE SPECIFED TOLERANCES

DECIMALS: ANGLES:
X :±0.5 X :±2°
X.X :±0.3 X.X :±1°
X.XX :±0.2

Suzhou Singatron Auto Electronics CO.,LTD.
蘇州信音汽車電子有限公司

TITLE	CIRCULAR STANDARD SIZE (QUICK TYPE) MALE CONN. FEMALE (2+4)PIN(10+5)A LOCK TYPE		
DWN	Elrod	PART NO.2QT3030-W06801H	
CHKD	JUN	SCALE 2:1	UNIT: mm
APVD	JF	SIZE: A3	SHEET:1 OF 1 REV:B

CUSTOMER COPY

文件編號:RD-06-043-A