REV.	ECN NO OR DESCRIPTION	REVISED	DATE
A	PDR NO.T130807-2A	Soldier	2013.10.25
B	ECN NO.S131106Lable Rev:3A	Soldier	2013.11.04
C	ECR NO.:S131139 PINK AND TRANSPARENT 粉紅色透明保護套管	WINNIE	2014.01.15

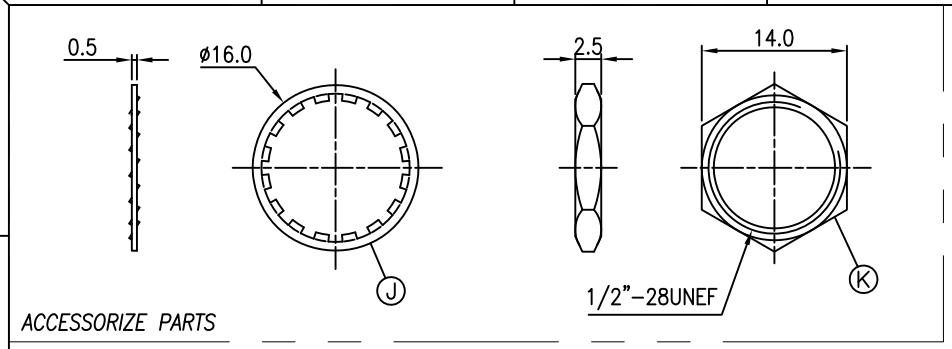

SPECIFICATIONS:

1. IMPEDANCE : 75 ohm for NTSC NOMINAL
2. FREQUENCY RANGE : 0~1 GHz
3. TEMPERATURE RANGE : -40~+90 °C
4. INSERTION LOSS : 1.5 dB AT 1 GHz
5. OTHER GENERAL SPEC. TO REFER "2RF3010-015106F SPEC".
6. TO CONFORM TO THE EU RoHS DIRECTIVE.
7. HALOGEN FREE PRODUCT IDENTIFICATION LOGO ON PACKAGING:

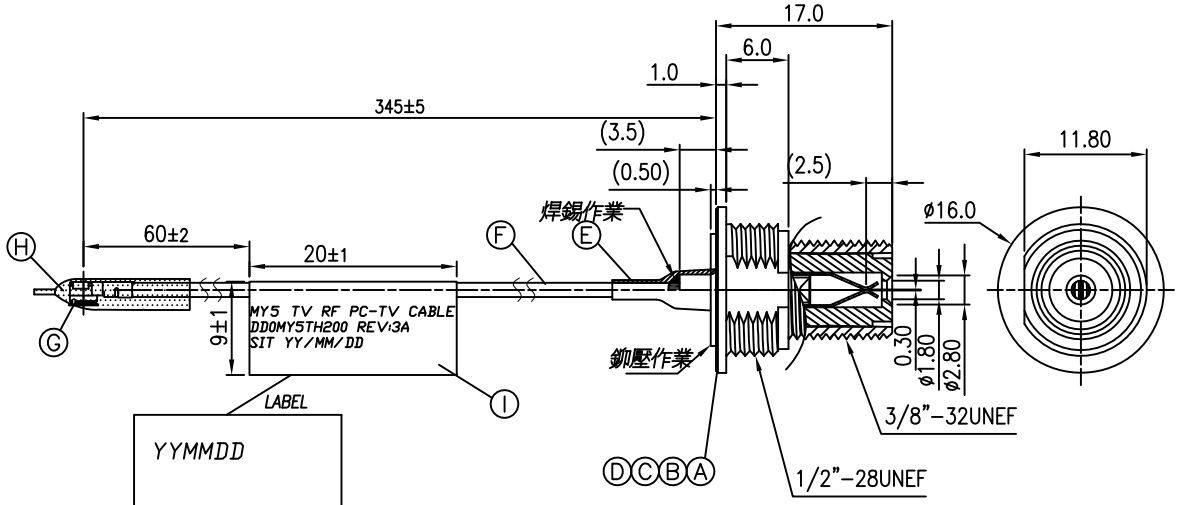

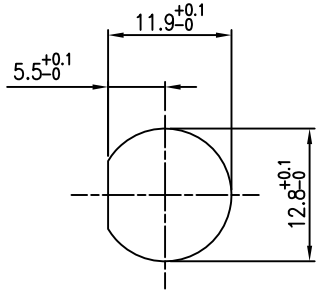

RECOMMENDED MOUNTING HOLE

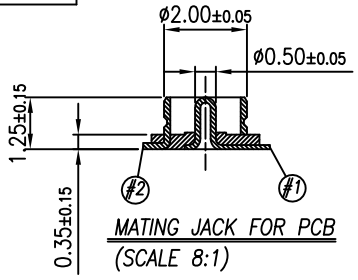

MATING JACK FOR PCB
(SCALE 8:1)

Contact Pin Definition

PIN	FUNCTION
#1	Signal
#2	Ground

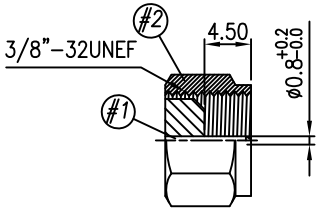

MATING PLUG

Contact Pin Definition

PIN	FUNCTION
#1	Signal
#2	Ground

NO	DESCRIPTION	QTY	MATERIAL	PLATING & COLOR
K	NUT	1	ZINC ALLOY	NICKEL PLATING
J	WASHER	1	SPCC 0.5t	NICKEL PLATING
I	LABEL	1	L20xW18	WHITE COLOR
H	PROTECT TUBE	1	ø2.5x15L	PINK AND TRANSPARENT 粉紅色透明保護套管
G	Mirco Coaxial Conn.	1	Brass,IPEX 20351 or the same as	GOLD PLATING
F	WIRE	1	ø1.37 Coaxial Cable	BLACK COLOR
E	HEAT SHRINK TUBE	1	ø2.5x10L	BLACK COLOR
D	ALLOY STOPPER	1	ZINC ALLOY	NICKEL PLATING
C	CENTER CONTACT	1	PHOSPHOR BRONZE	GOLD FLASH ON CONTACT AREA
B	INSULATOR	1	POLYOXYMETHYLENE	WHITE COLOR
A	ALLOY BODY	1	ZINC ALLOY	NICKEL PLATING

UNLESS OTHERWISE SPECIFED TOLERANCES

DECIMALS: X :±0.5, X.X :±0.3, X.XX :±0.2

ANGLES: X :±2°, X.X :±1°

Singatron Enterprise Co., Ltd.
信音企業股份有限公司

TITLE	Cable Assembly(F)		
DWN	WINNIE	PART NO.2RF3010-015106F	
CHKD		SCALE 2:1	UNIT: mm
APVD	BOYE	SIZE: A3	SHEET:1 OF 1 REV:C

CUSTOMER COPY

文件編號 RD-06-043-A