REV.	ECN NO OR DESCRIPTION	REVISED	DATE
A	PDR RELEASE	Even	2020.11.10

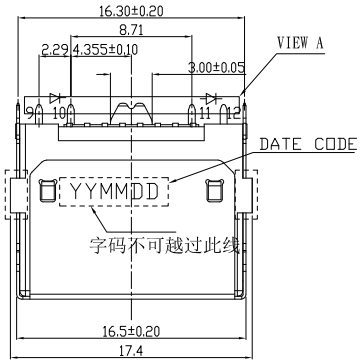

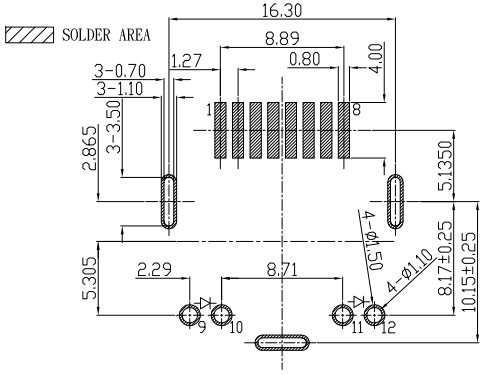

RECOMENDED PCB LAYOUT
TOLERANCE:±0.05mm
RECOMENDED PCB THICKNESS:1.60±0.05

SPECIFICATIONS:

1. VOLTAGE RATING: 150 VAC MAX.
2. CURRENT RATING: 1.5 AMP MAX.
3. INSULATION RESISTANCE: 500M OHMS MIN. AT 500 VDC.
4. DIELECTRIC WITHSTANDING VOLTAGE: 500 VAC 60Hz 1 MINUTE.
5. INSERTION FORCE:2.30 Kgf MAX
6. EXTRACTION FORCE:4.54 Kgf Min
7. DURABILITY: 5000 CYCLES .
8. OPERATING TEMPERATURE: −30°C TO +70°C.
9. TO CONFORM TO SINGATRON HAZARDOUS SUBSTANCE FREE SPEC.
10. HALOGEN FREE PRODUCT IDENTIFICATION LABEL ON PACKAGING:
11. PACKAGE: SEE "2RJ1799−002111F" PACKAGE.
12. FOR REFLOW SOLDERING LEAD−FREE PROCESS.
13. MATES WITH MODULAR PLUG CONFORMING TO FCC PART 68, SUBPART F.
14. Resistance to solder heat(IR reflow):260°C , 5 sec.max.
15. OTHER GENERAL SPEC. TO REFER "2RJ1799−002111F SPEC".

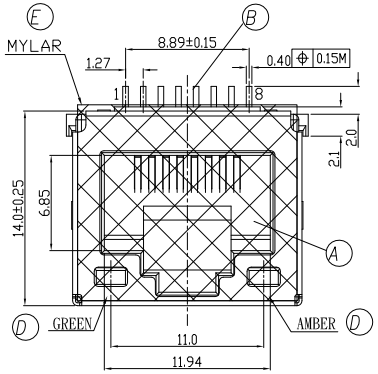

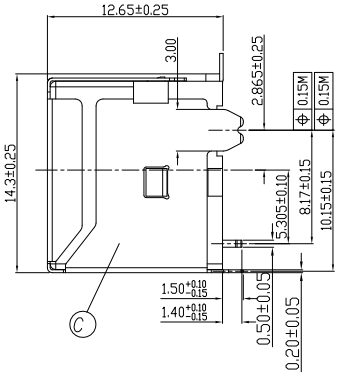

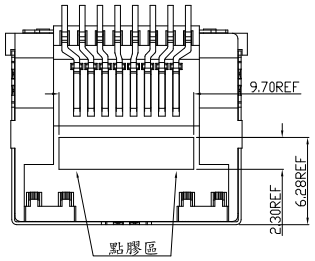

PART NO.
2RJ1799−002111F

- SUFFIX: HALOGEN FREE
- PACKAGE
  1: TAPE & REEL
- HOUSING COLOR
  1: BLACK
- CONTACT AREA PLATING
  1: GOLD FLASH ON CONTACT AREA,
  MATTE TIN 80u" MIN ON SOLDER AREA.
  50u" MIN NICKEL UNDERPLATED OVERALL.

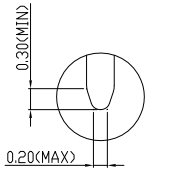

VIEW A SCALE 5:1

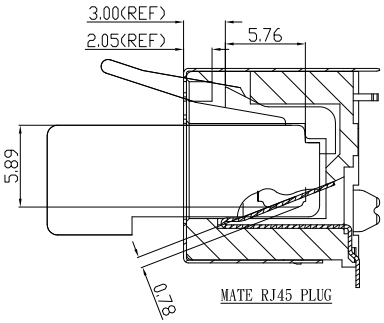

MATE RJ45 PLUG

LED ELECTRICAL CHARACTERISTIC				
NODE	COLOR		WAVELENGTE	FORWARD CURRENT
9(+) 10(-)	GREEN	9 −▷|−0	564-577nm	If=20mA
11(+) 12(-)	AMBER	11 −▷|−2	600-612nm	If=20mA

NO	DESCRIPTION	QTY	MATERIAL	PLATING & COLOR
E	MYLAR	1		YELLOW
D	LED	2	GREEN/AMBER	
C	SHIELD	1	SUS201	50u" NICKEL PLATED
B	CONTACT	8	C5210R−EH	SEE PART NO.
A	HOUSING	1	PA10T UL 94V−0	BLACK

UNLESS OTHERWISE SPECIFIED TOLERANCES

DECIMALS: X :±0.5 X.X :±0.3 X.XX :±0.2

ANGLES: X :±2° X.X :±1°

信音科技(香港)有限公司

TITLE	RJ45 PHONE JACK		
DWN	EVEN 2020.11.10	PART NO. 2RJ1799−002111F	
CHKD		SCALE 3/1	UNIT: mm
APVD	ANGELA 2020.11.10	SIZE: A3	SHEET:1 OF 1 REV:A

CUSTOMER COPY

文件編號 7F−02−R013−A