REV.	ECN NO OR DESCRIPTION	REVISED	DATE
A	PDR NO.T220704-3A	PAN	2023.05.17
B	ECN NO.S202309-C26	JIANGUO	2023.09.27

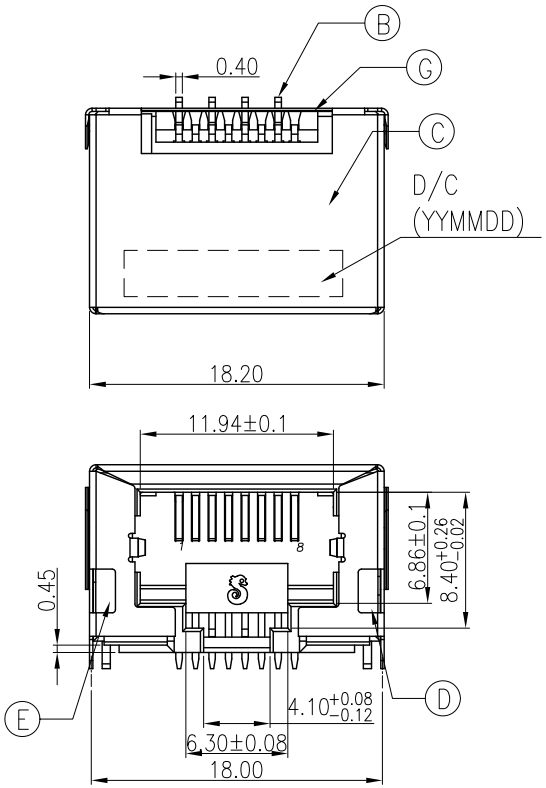

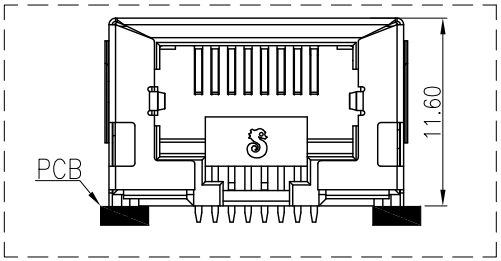

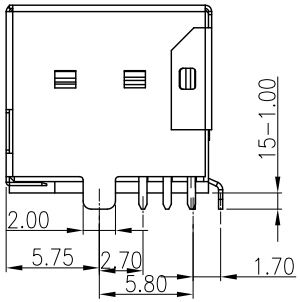

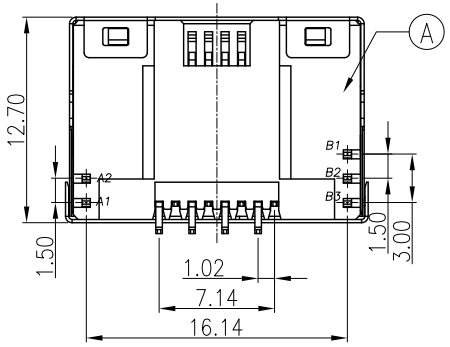

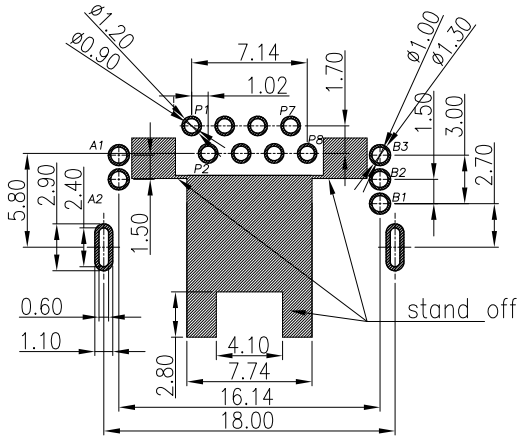

RECOMMENDED PCB LAYOUT
TOP VIEW ; TOL.±0.05
(PCB THICKNESS=1.20mm)

SPECIFICATIONS:

1. ELECTRICAL CHARACTERISTICS:
   1-1. CURRENT RATING: 0.5A MAX.
   1-2. VOLTAGE RATING: 150V MAX.
   1-3. CONTACT RESISTANCE : 50mΩ MAX.(INITIAL).
   100mΩ MAX.(AFTER LIFE TEST).
   1-4. INSULATION RESISTANCE : 100MΩ MIN.
2. MECHANICAL CHARACTERISTICS:
   2-1. DURABILITY: 5000 CYCLES.
   2-2. INSERTION FORCE: 2.25Kg MAX. WITH LATCH DEPRESSED.
   2-3. WITHDRAWAL FORCE: 4.5Kg MAX. WITH LATCH DEPRESSED.
   2-4. OPERATING TEMPERATURE: -30℃ ~ +70℃.
3. MARKING: MARK" " INSIDE OF THE CONNECTOR.
4. PACKAGING : TAPE & REEL.
5. TO CONFORM TO SINGATRON HAZARDOUS SUBSTANCE FREE SPEC.
6. HALOGEN FREE PRODUCT IDENTIFICATION
   MARK ON PRODUCT:
7. HALOGEN FREE PRODUCT IDENTIFICATION LOGO
   ON THE PACKAGING:
8. FOR REFLOW SOLDERING LEAD-FREE PROCESS.
9. PRINTED DATE CODE" YY MM DD " ON TOP OF THE CONNECTOR.
   - DD: DAY
   - MM: MONTH
   - YY: YEAR

NODE	COLOR		Wavelength	Test Condition
B1(-) B2(+)	GREEN	B3 B1 B2	566~574nm	I_F =20mA
B3(-) B2(+)	ORANGE		600~612nm	I_F =20mA
B1(-) B3(-) B2(+)	YELLOW		585~594nm	I_F =20mA
A1(-) A2(+)	YELLOW	A2 A1	585~594nm	I_F =20mA

NO	DESCRIPTION	QTY	MATERIAL	PLATING & COLOR
G	MYLAR	1	YELLOW	
F	STOP	2	HIGH TEMP.THERMOPLASTIC	UL 94V-0 & BLACK
E	LED	1	YELLOW	
D	LED	1	GREEN AND ORANGE AND YELLOW	
C	SHELL	1	SUS304 1/2H	NI PLATING ALL OVER
B	8P8C TERMINAL	8	PHOSPHOR BRONZE 0.20t	3uin Min. AU ON CONTACT AREA; Matte Sn 120u" ON SOLDER TAIL; ALL OVER Ni 50u"MIN.
A	BODY	1	HIGH TEMP.THERMOPLASTIC	UL 94V-0 & BLACK

UNLESS OTHERWISE SPECIFED TOLERANCES

DECIMALS: X :±0.5, X.X :±0.3, X.XX :±0.2
ANGLES: X :±2°, X.X :±1°

Singatron Enterprise Co., Ltd.
信音企業股份有限公司

TITLE	RJ45 JACK			
DWN	JIANGUO	PART NO. 2RJ3022-128211F		
CHKD	Allen	SCALE 4:1	UNIT: mm	
APVD	Boye	SIZE: A3	SHEET:1 / 2	REV:B

CUSTOMER COPY

文件編號: RD-06-043-A

REV.	ECN NO OR DESCRIPTION	REVISED	DATE
A	PDR NO.T220704-3A	PAN	2023.05.17
B	ECN NO.S202309-C26	JIANGUO	2023.12.04

5.89 Plug Worst case 分析

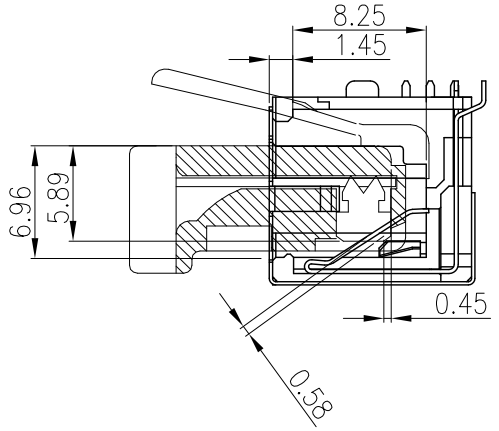

6.40 Plug Worst case 分析

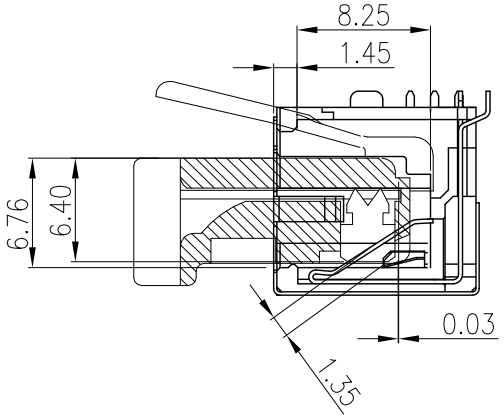

防RJ11插入模似分析

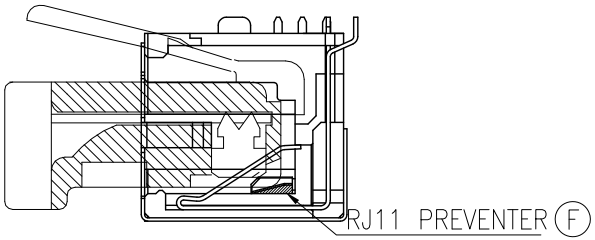

B 5.70 Plug Worst case 分析

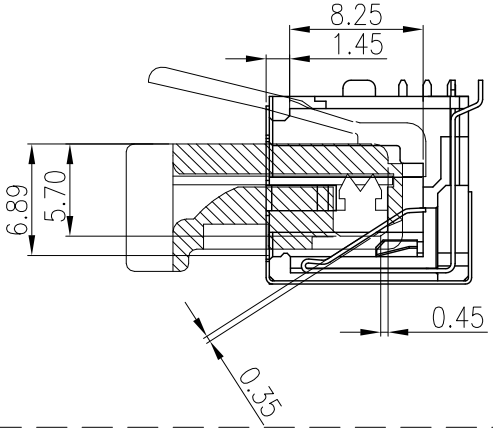

PIN 1	TX0+
PIN 2	TX0-
PIN 3	RX1+
PIN 4	TX2+
PIN 5	TX2-
PIN 6	RX1-
PIN 7	TX3+
PIN 8	TX3-

NO	DESCRIPTION	QTY	MATERIAL	PLATING & COLOR

UNLESS OTHERWISE SPECIFED TOLERANCES

DECIMALS: X :±0.5, X.X :±0.3, X.XX :±0.2

ANGLES: X :±2°, X.X :±1°

Singatron Enterprise Co., Ltd.
信音企業股份有限公司

TITLE	RJ45 JACK			
DWN	JIANGUO	PART NO. 2RJ3022-128211F		
CHKD	Allen	SCALE 4:1	UNIT: mm	
APVD	Boye	SIZE: A3	SHEET:2 / 2	REV:B

CUSTOMER COPY

文件編號: RD-06-043-A