REV.	ECN NO OR DESCRIPTION	REVISED	DATE
A	PDR NO:T131204-2A	ALLEN	2014.02.17
B	ECR NO:S151014-E	ALLEN	2015.10.19

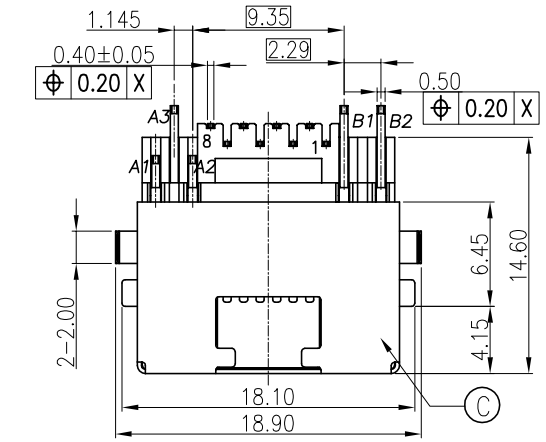

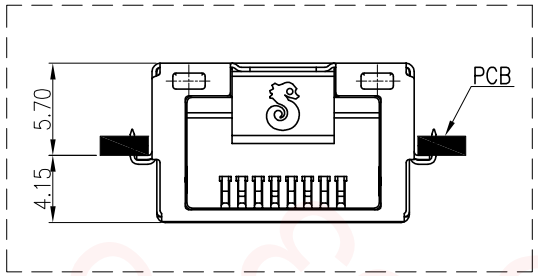

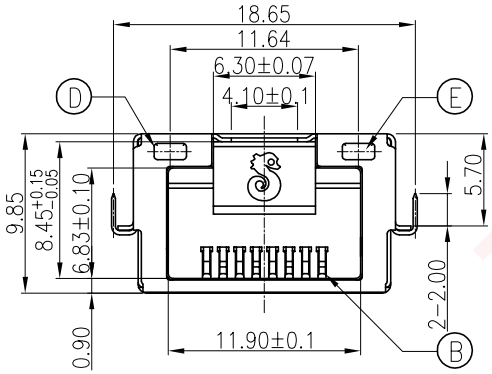

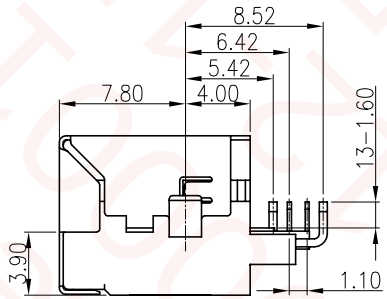

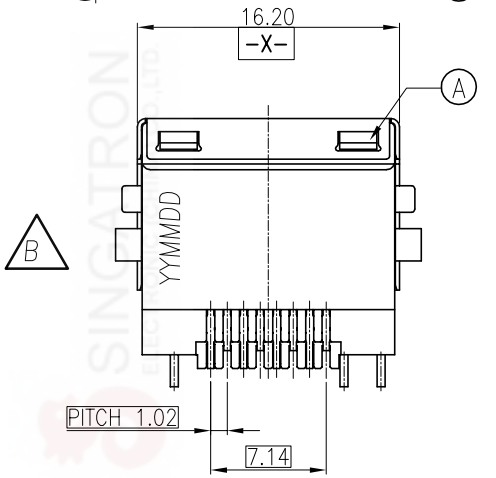

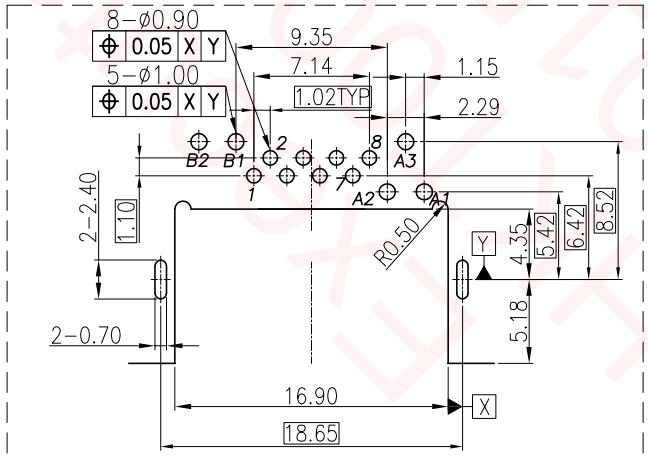

RECOMMENDED PCB LAYOUT
TOP VIEW ; TOL.±0.05
(PCB THICKNESS=1.20mm)

SPECIFICATIONS:

1. ELECTRICAL CHARACTERISTICS:
   1-1. CURRENT RATING: 1.5A MAX.
   1-2. VOLTAGE RATING: 150V MAX.
   1-3. CONTACT RESISTANCE : 50mΩ MAX.(INITIAL).
   100mΩ MAX.(AFTER LIFE TEST).
   1-4. INSULATION RESISTANCE : 100MΩ MIN.
2. MECHANICAL CHARACTERISTICS:
   2-1. DURABILITY: 5000 CYCLES.
   2-2. INSERTION FORCE: 2.25Kg MAX. WITH LATCH DEPRESSED.
   2-3. WITHDRAWAL FORCE: 4.5Kg MAX. WITH LATCH DEPRESSED.
   2-4. OPERATING TEMPERATURE: -30℃ ~ +70℃.
3. MARKING: MARK" " INSIDE OF THE CONNECTOR.
4. PACKAGING : TAPE & REEL.
5. TO CONFORM TO SINGATRON HAZARDOUS SUBSTANCE FREE SPEC.
6. HALOGEN FREE PRODUCT IDENTIFICATION
   MARK ON PRODUCT:
7. HALOGEN FREE PRODUCT IDENTIFICATION LOGO
   ON THE PACKAGING:
8. FOR REFLOW SOLDERING LEAD-FREE PROCESS.
9. PRINTED DATE CODE" YY MM DD " ON TOP OF THE CONNECTOR.
   DD: DAY
   MM: MONTH
   YY: YEAR

LED ELECTRICAL CHARACTERISTIC

NODE	COLOR		Wavelength
A1(-) A3(+)	GREEN	A1 A2 A3	564.5~576.5 (nm)
A2(-) A3(+)	ORANGE		602~610 (nm)
A1(-) A2(-) A3(+)	YELLOW		
B1(+) B2(-)	YELLOW	B1 B2	585~597(nm)

NO	DESCRIPTION	QTY	MATERIAL	PLATING & COLOR
E	LED	1		YELLOW
D	LED	1		YELLOW GREEN OARNGE
C	SHELL	1	Stainless Steel	NI PLATING ALL OVER
B	8P8C CONTACT	8	PHOSPHOR BRONZE	G/F ON CONTACT AREA; Matte Sn 120u" ON SOLDER TAIL; ALL OVER Ni 50u"MIN.
A	BODY	1	PA10T	UL 94V-0 & BLACK

UNLESS OTHERWISE SPECIFED TOLERANCES

DECIMALS: X :±0.5, X.X :±0.3, X.XX :±0.2

ANGLES: X :±2°, X.X :±1°

Singatron Enterprise Co., Ltd.
信音企業股份有限公司

TITLE	RJ45 JACK			
DWN	ALLEN	PART NO. 2RJ3030-1B8411F		
CHKD	JAMES	SCALE 4:1	UNIT: mm	
APVD	BOYE	SIZE: A3	SHEET:1 / 1	REV: B

CUSTOMER COPY

文件編號 RD-06-043-A