REV.	ECN NO OR DESCRIPTION	REVISED	DATE
A	PDR NO:T120808-2A	ALLEN	2013.09.02
B	ECN NO:S140125	ALLEN	2014.02.27

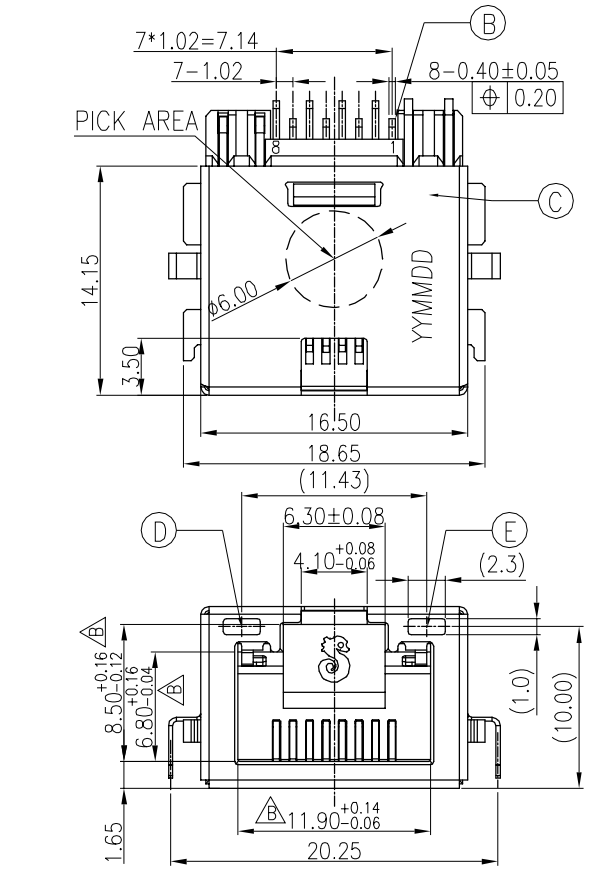

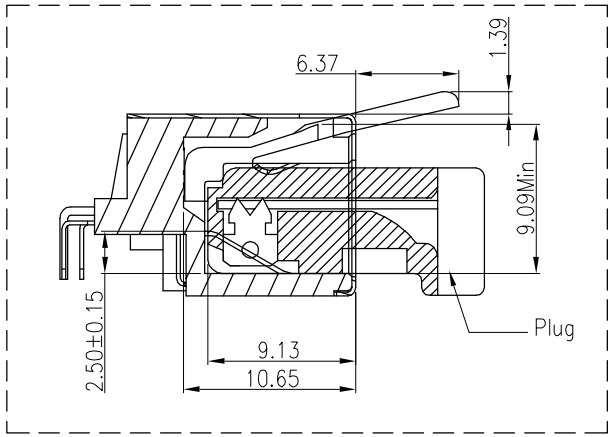

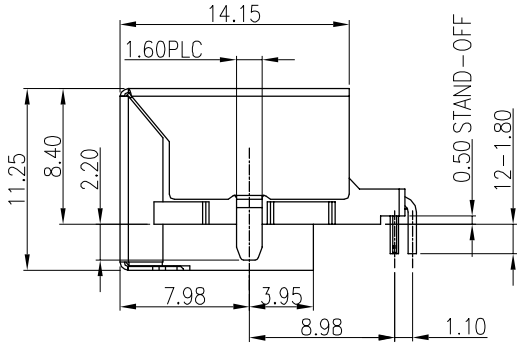

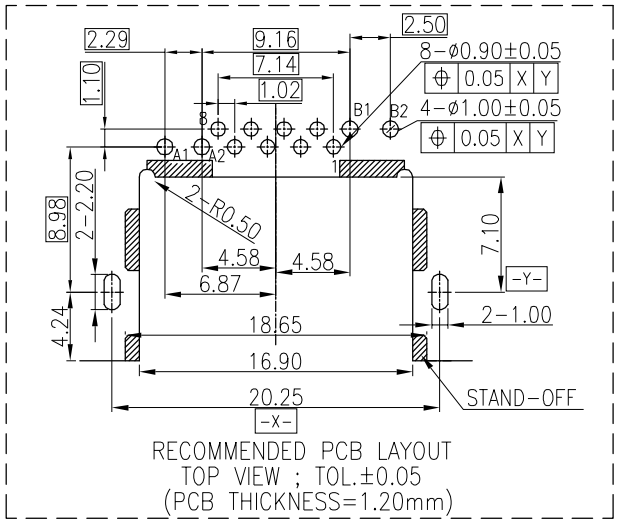

RECOMMENDED PCB LAYOUT
TOP VIEW ; TOL.±0.05
(PCB THICKNESS=1.20mm)

SPECIFICATIONS:

1. ELECTRICAL CHARACTERISTICS:
   1-1. CURRENT RATING: 0.5A MAX.
   1-2. VOLTAGE RATING: 150V MAX.
   1-3. CONTACT RESISTANCE : 50mΩ MAX.(INITIAL).
   100mΩ MAX.(AFTER LIFE TEST).
   1-4. INSULATION RESISTANCE : 100MΩ MIN.
   1-5. Dielectric Withstanding Voltage : 500 V AC at sea level.
2. MECHANICAL CHARACTERISTICS:
   2-1. DURABILITY: 5000 CYCLES.
   2-2. INSERTION FORCE: 2.25Kg MAX. WITH LATCH DEPRESSED.
   2-3. WITHDRAWAL FORCE: 4.5Kg MAX. WITH LATCH DEPRESSED.
   2-4. OPERATING TEMPERATURE: -30℃ ~ +70℃
3. MARKING: MARK" " INSIDE OF THE CONNECTOR.
4. PACKAGING : TAPE & REEL.
5. TO CONFORM TO SINGATRON HAZARDOUS SUBSTANCE FREE SPEC.
6. HALOGEN FREE PRODUCT IDENTIFICATION
   MARK ON PRODUCT:
7. HALOGEN FREE PRODUCT IDENTIFICATION LOGO
   ON THE PACKAGING:
8. FOR REFLOW SOLDERING LEAD-FREE PROCESS.
9. PRINTED DATE CODE" YY MM DD " ON TOP OF THE CONNECTOR.
   - DD: DAY
   - MM: MONTH
   - YY: YEAR

NODE	COLOR		Wavelength	Test Condition
A1(-) A2(+)	AMBER	A2→A1	585~594nm	I_F =20mA
B1(-) B2(+)	GREEN	B2→B1	564.5~576.5nm	I_F =20mA

NO	DESCRIPTION	QTY	MATERIAL	PLATING & COLOR
E	LED	1		GREEN
D	LED	1		AMBER
C	SHELL	1	COPPER ALLOY	NI PLATING ALL OVER
B	8P8C CONTACT	8	PHOSPHOR BRONZE 0.25t	5u" Au ON CONTACT AREA; Matte Sn 120u" ON SOLDER TAIL; ALL OVER Ni 50u"MIN.
A	BODY	1	HIGH TEMP.THERMOPLASTIC	UL 94V-0 & BLACK

UNLESS OTHERWISE SPECIFED TOLERANCES

DECIMALS: X :±0.50, X.X :±0.30, X.XX :±0.20

ANGLES: X :±2°, X.X :±1°

Singatron Enterprise Co., Ltd.
信音企業股份有限公司

TITLE	RJ45 JACK			
DWN	ALLEN	PART NO. 2RJ3039-108411F		
CHKD		SCALE 4:1	UNIT: mm	
APVD	JAMES	SIZE: A3	SHEET:1 / 1	REV: B

CUSTOMER COPY

文件編號: RD-06-043-A