REV.	ECN NO OR DESCRIPTION	REVISED	DATE
A	PDR NO.:T120827-1A	Soldier	2013.10.16

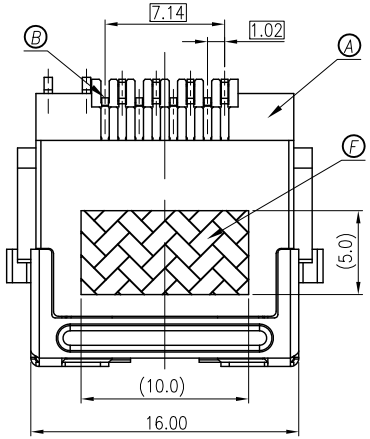

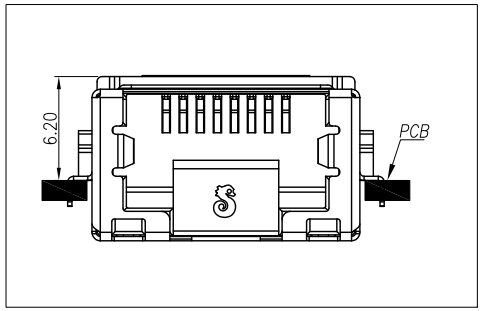

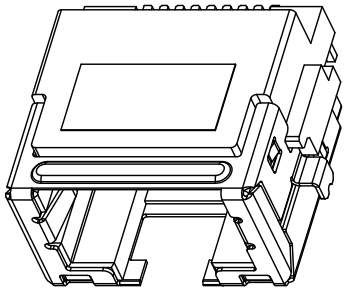

SPECIFICATIONS:

1. ELECTRICAL CHARACTERISTICS:
   1-1. CURRENT RATING: 1.5A MAX.
   1-2. VOLTAGE RATING: 150V MAX.
   1-3. CONTACT RESISTANCE: 50mΩ MAX.(INITIAL).
   100mΩ MAX.(AFTER LIFE TEST).
   1-4. INSULATION RESISTANCE: 100MΩ MIN.
2. MECHANICAL CHARACTERISTICS:
   2-1. DURABILITY: 5000 CYCLES.
   2-2. INSERTION FORCE: 2.25Kg MAX. WITH LATCH DEPRESSED.
   2-3. WITHDRAWAL FORCE: 4.5Kg MAX. WITH LATCH DEPRESSED.
   2-4. OPERATING TEMPERATURE:-30°C ~ +70°C.
3. MARKING: MARK" " INSIDE OF THE CONNECTOR.
4. PACKAGING : TAPE & REEL.
5. TO CONFORM TO SINGATRON HAZARDOUS SUBSTANCE FREE SPEC.
6. HALOGEN FREE PRODUCT IDENTIFICATION
   MARK ON PRODUCT:
7. HALOGEN FREE PRODUCT IDENTIFICATION LOGO
   ON THE PACKAGING:
8. FOR REFLOW SOLDERING LEAD-FREE PROCESS.
9. PRINTED DATE CODE" YY MM DD " ON THE CONNECTOR.
   DD: DAY
   MM: MONTH
   YY: YEAR

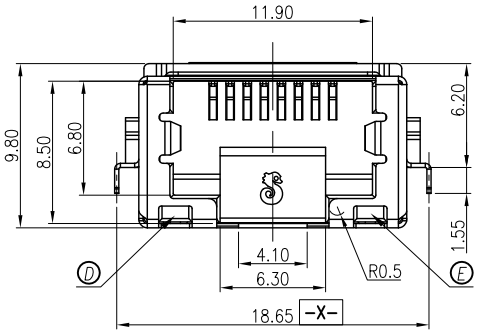

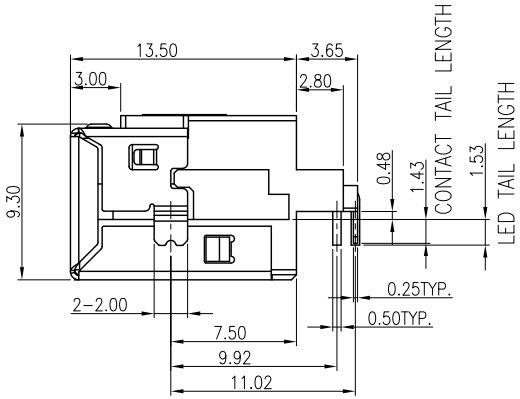

NODE	COLOR		Wavelength	Test Condition	Temperature
A1(+) A2(-)	YELLOW	A1-▷◁-A2	585~597 nm	I_F=20 mA	260°C 5s
B1(+) B2(-)	GREEN	B1-▷◁-B2	564~577 nm	I_F=20 mA	260°C 5s
B1(-) B2(+)	ORANGE	B1-◁▷-B2	600~612 nm	I_F=20 mA	260°C 5s

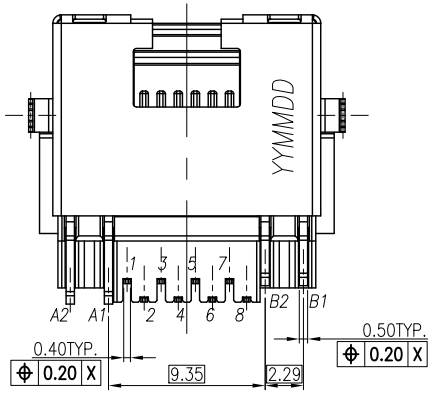

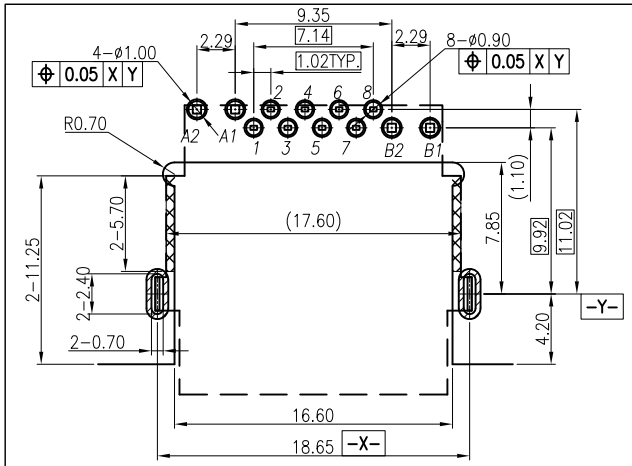

RECOMMENDED PCB LAYOUT(TOP VIEW) T=1.2mm

(TOLERANCE:±0.05) STAND OFF AREA

NO	DESCRIPTION	QTY	MATERIAL	PLATING & COLOR
F	MYLAR	1	KAPTON FILM	W10*L5
E	LED	1		GREEN / ORANGE
D	LED	1		YELLOW
C	SHIELDING	1	STAINLESS STEEL,T0.25	NI 40u" PLATING ALL OVER
B	8P8C CONTACT	8	PHOSPHOR BRONZE, T=0.25	G/F ON CONTACT AREA; Matte Sn 80u" ON SOLDER TAIL; ALL OVER Ni 40u"MIN.
A	BODY	1	LCP E130I+30%GF	UL 94V-0 & BLACK

UNLESS OTHERWISE SPECIFED TOLERANCES

DECIMALS: X :±0.5, X.X :±0.3, X.XX :±0.2

ANGLES: X :±2°, X.X :±1°

Singatron Enterprise Co., Ltd.
信音企業股份有限公司

TITLE	RJ45 JACK 6.2H ON PCB		
DWN	Soldier	PART NO.2RJ3048-108211F	
CHKD	Boye	SCALE:4:1	UNIT: mm
APVD	Boye	SIZE: A3	SHEET:1 OF 1 REV: A

CUSTOMER COPY

文件編號:RD-06-043-A