REV.	ECN NO OR DESCRIPTION	REVISED	DATE
A	PDR NO:T150710-3A	ALLEN	2016.10.12

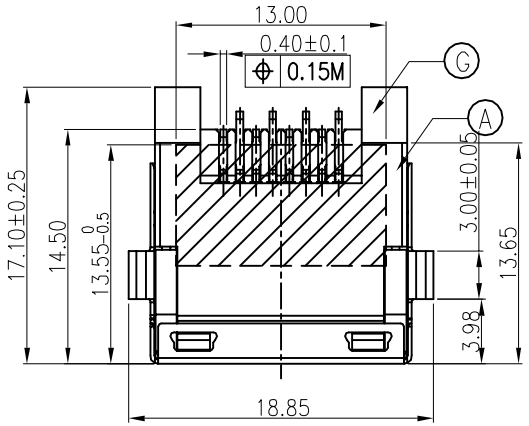

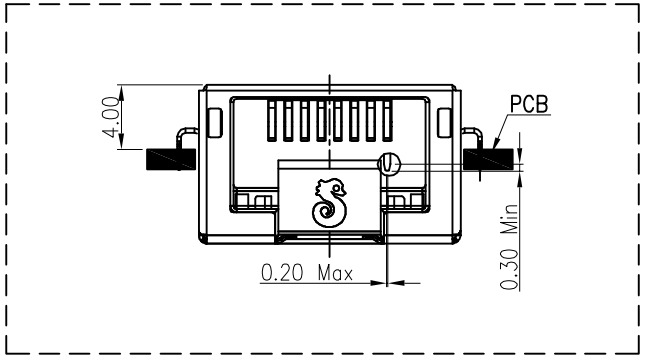

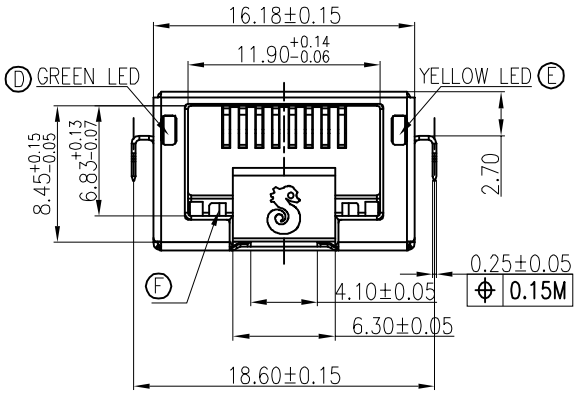

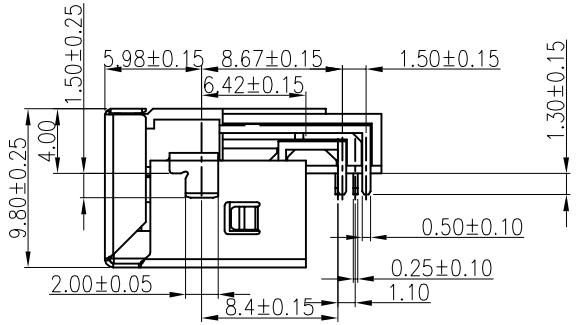

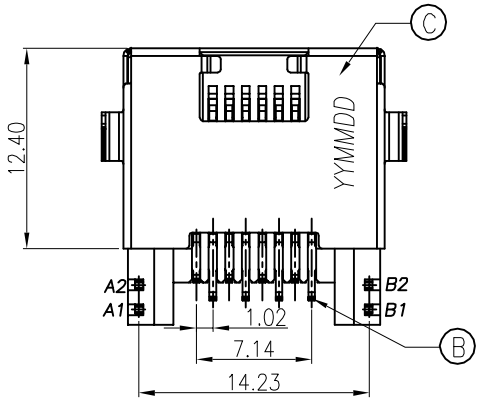

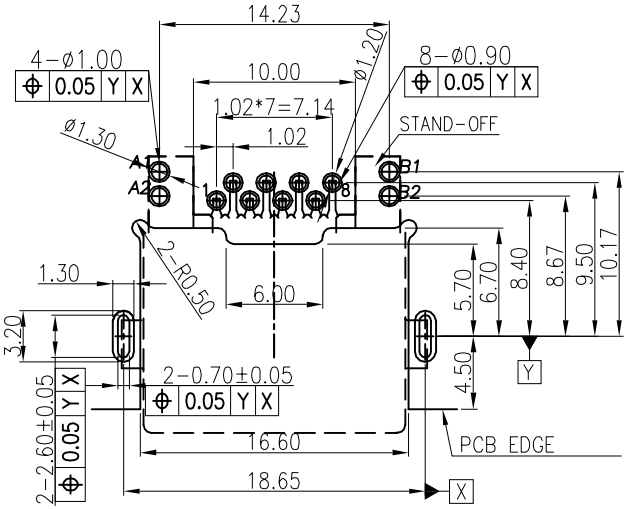

RECOMMENDED PCB LAYOUT
TOP VIEW ; TOL.±0.05
(PCB THICKNESS=1.20mm)

SPECIFICATIONS:

1. ELECTRICAL CHARACTERISTICS:
   1-1. CURRENT RATING: 1.5A MAX.
   1-2. VOLTAGE RATING: 150V MAX.
   1-3. CONTACT RESISTANCE: 50mΩ MAX.(INITIAL).
   100mΩ MAX.(AFTER LIFE TEST).
   1-4. INSULATION RESISTANCE: 100MΩ MIN.
2. MECHANICAL CHARACTERISTICS:
   2-1. DURABILITY: 5000 CYCLES.
   2-2. INSERTION FORCE: 2.25Kg MAX. WITH LATCH DEPRESSED.
   2-3. WITHDRAWAL FORCE: 4.5Kg MAX. WITH LATCH DEPRESSED.
   2-4. OPERATING TEMPERATURE: -30℃ ~ +70℃.
3. MARKING: MARK" " INSIDE OF THE CONNECTOR.
4. PACKAGING : TAPE & REEL.
5. TO CONFORM TO SINGATRON HAZARDOUS SUBSTANCE FREE SPEC.
6. HALOGEN FREE PRODUCT IDENTIFICATION
   MARK ON PRODUCT:
7. HALOGEN FREE PRODUCT IDENTIFICATION LOGO
   ON THE PACKAGING:
8. FOR REFLOW SOLDERING LEAD-FREE PROCESS.
9. PRINTED DATE CODE" YY MM DD " ON TOP OF THE CONNECTOR.
   - DD: DAY
   - MM: MONTH
   - YY: YEAR

NODE	COLOR	
A1(+) A2(-)	GREEN	A1 A2
B1(+) B2(-)	YELLOW	B1 B2

NO	DESCRIPTION	QTY	MATERIAL	PLATING & COLOR
G	Mylar	1	T=0.06	BLACK
F	STOP	2	SUS301 1/2H	
E	LED	1		YELLOW
D	LED	1		GREEN
C	SHELL	1	COPPER ALLOY	NI PLATING ALL OVER
B	8P8C CONTACT	8	PHOSPHOR BRONZE	Au:5u" ON CONTACT AREA; Matte Sn 120u" ON SOLDER TAIL; ALL OVER Ni 50u"MIN.
A	BODY	1	LCP	UL 94V-0 & BLACK

UNLESS OTHERWISE SPECIFED TOLERANCES

DECIMALS: X :±0.5, X.X :±0.3, X.XX :±0.2

ANGLES: X :±2°, X.X :±1°

Singatron Enterprise Co., Ltd.
信音企業股份有限公司

TITLE	RJ45 JACK			
DWN	Allen	PART NO. 2RJ3070-178211F		
CHKD	James	SCALE 4:1	UNIT: mm	
APVD	Boye	SIZE: A3	SHEET:1 / 1	REV: A

CUSTOMER COPY

文件編號 RD-06-043-A