REV.	ECN NO OR DESCRIPTION	REVISED	DATE
A	PDR NO: T230614-4A	JIANGTAO	2023.12.04

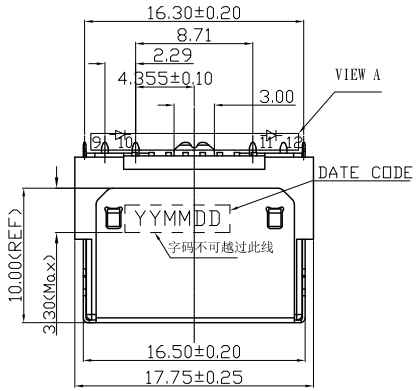

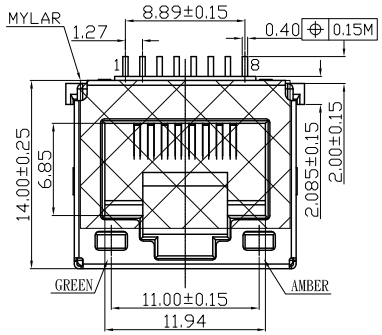

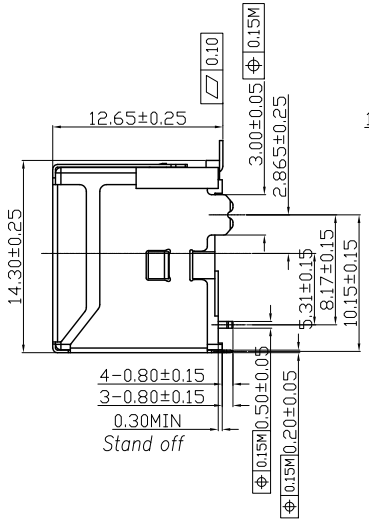

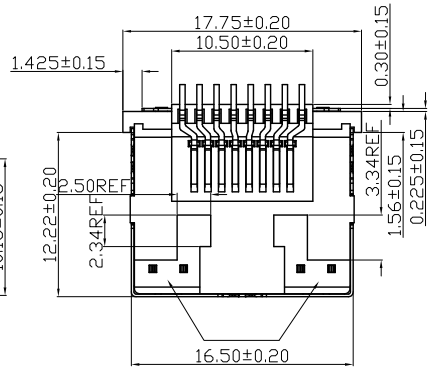

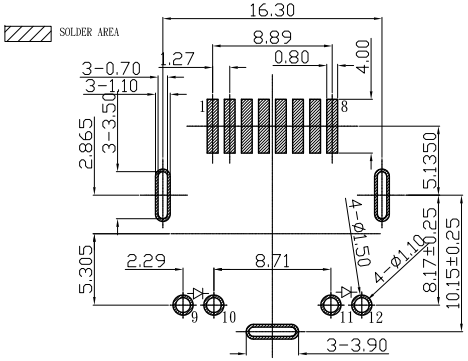

RECOMMENDED PCB LAYOUT
TOLERANCE:±0.05mm
RECOMMENDED PCB THICKNESS:1.60±0.05

SPECIFICATIONS:

1. VOLTAGE RATING:150VAC MAX.
2. CURRENT RATING:1.5AMP MAX.
3. CONTACT RESISTANCE: 45mΩ MAX.(INITIAL).
4. INSULATION RESISTANCE:500MΩ MIN. AT 500VDC.
5. DIELECTRIC WITHSTANDING VOLTAGE: 500V AC 60HZ 1 MINUTE.
6 INSERTION FORCE:2.30 Kgf MAX
EXTRACTION FORCE:1.02 Kgf MAX.WHEN PLUG SIDE PUSH LATCH RELEASED
7. DURABILIY: 5000 CYCLES.
8. OPERATING TEMPERATURE:-30°C TO+70°C.
9. TO CONFORM TO SINGATRON HAZARDOUS SUBSTANCE FREE SPEC.
10. HALOGEN FREE PRODUCT IDENTIFICATION LABEL ON PACKAGING
11. PACKAGE: SEE "2RJ3Y44-000111F " PACKAGE
12 FOR REFLOW SOLDERING LEAD-FREE PROCESS.
13. MATES WITH MODULAR PLUG CONFORMING TO FCC PART 68, SUBPART F
14. OTHER GENERAL SPEC.TO REFER"2RJ3Y44-000111F SPEC

PART NO.
2RJ3Y44-000111F
- F: HALOGEN FREE
- PACKAGE
  1:TAPE&REEL
- HOUSING COLOR
  1:BLACK
- CONTACT AREA PLATING
  1:GOLD FLASH(1~3u") ON CONTACT AREA
  MATTE TIN 80u" MIN ON SOLDER AREA
  30u MIN NICKEL UNDERPLATED OVERALL

LED ELECTRICAL CHARACTERISTIC

NODE	COLOR		FORWARD CURRENT
9(+) 10(-)	GREEN	9 10	IF=20mA
11(+) 12(-)	AMBER	11 12	IF=20mA

pin define:

10/100Base-T		100Base-T4	
Pin 1	TX+	Pin 1	TX_D1+
Pin 2	TX-	Pin 2	TX_D1-
Pin 3	RX+	Pin 3	RX_D2+
Pin 4	n/c	Pin 4	BI_D3+
Pin 5	n/c	Pin 5	BI_D3-
Pin 6	RX-	Pin 6	RX_D2-
Pin 7	n/c	Pin 7	BI_D4+
Pin 8	n/c	Pin 8	BI_D4-

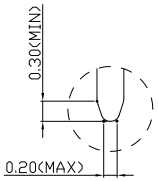

VIEW A SCALE 5:1

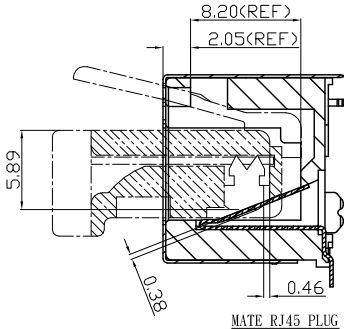

MATE RJ45 PLUG

NO	DESCRIPTION	QTY	MATERIAL	PLATING & COLOR
E	MYLAR	1	THERMOPLASTIC 11*15.6 T=0.08	YELLOW
D	LED	2	GREEN/AMBER	SILVER
C	SHELL	1	SUS(201);T=0.20mm	50u" NICKEL PLATED
B	TERMINAL	8	PHOSPHOR BRONZE (C5210R-EH);T=0.25mm	1-3u"GOLD/MATTE SN 80u" MIN ON SOLDER TAIL,ALL OVER NI 30u" MIN
A	HOUSING	1	PA10T+35%GF(VICNYL R635NH) /PA4T;UL 94V-0,	BLACK

UNLESS OTHERWISE SPECIFED TOLERANCES

DECIMALS: X :±0.5, X.X :±0.3, X.XX :±0.2
ANGLES: X :±2°, X.X :±1°

Singatron Enterprise Co., Ltd.
信音企業股份有限公司

TITLE	RJ45 PHONE JACK			
DWN	JIANGTAO	PART NO. 2RJ3Y44-000111F		
CHKD	ALLEN	SCALE 1:1	UNIT: mm	
APVD	BOYE	SIZE: A3	SHEET: 10F1	REV: A

CUSTOMER COPY

文件編號 RD-06-043-A