REV.	ECN NO.	DATE
A	RELEASED	11/17-'05
B	Add Pin No.	04/11-'11

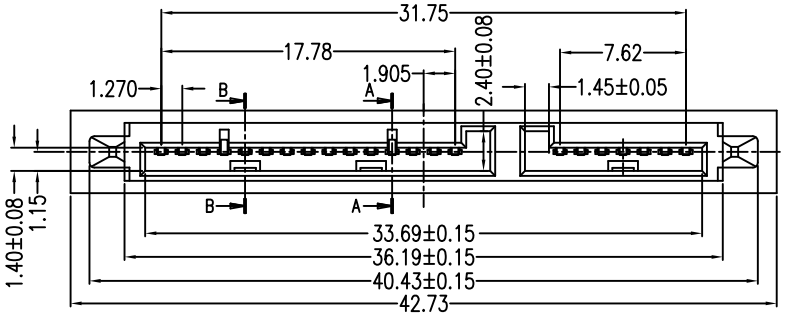

Signal Segment	
Name	Type
S1	GND
S2	A+
S3	A-
S4	GND
S5	B-
S6	B+
S7	GND

Power Segment			
Name	Type	Name	Type
P1	V33	P9	V5
P2	V33	P10	GND
P3	V33	P11	DAS/DSS
P4	GND	P12	GND
P5	GND	P13	V12
P6	GND	P14	V12
P7	V5	P15	V12
P8	V5		

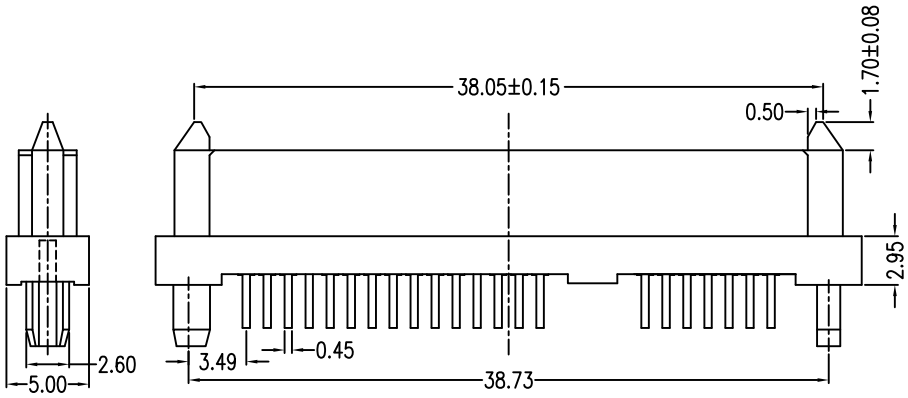

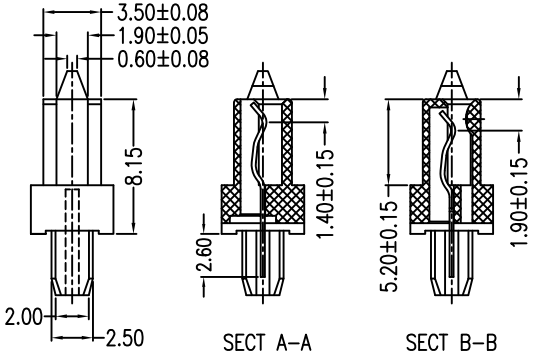

NOTES:

*Material

Housing: LCP+50%G.F, UL 94V-0 rated, Color: Black;
Contact: Phosphor Bronze;
Plating: Au Plating on contact area,
Sn(100u" Min) plating on Solder Tail,
Ni(40u" Min) underplating overall.

*Mechanical

Insertion Force: 45N Max;
Withdrawal Force: 10N Min;
Durability: 500 cycles.

*Electrical Specification

Operation Voltage: 100V AC Max;
Current Rating: 1.5 Ampere per contact;
Contact Resistance: 30mΩ Max;
Insulation Resistance: 1000MΩ Min;
Dielectric Withstanding Voltage: 500V AC.

*Environmental

Operating Temperature: -55°C to +85°C.

*How to Order:

2SAT-F22-V5D-H9

- V5D — Selective Au: F:Flash 5:15u"
- F22 — NO. of Contacts
- 2SAT — SATA Series

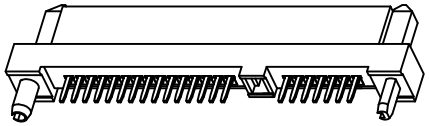

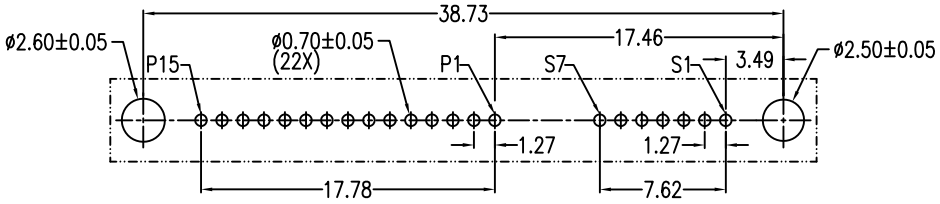

PCB Layout(T=1.60mm)
COMPONENT SIDE

Units	mm	Scale	2:1
Tolerance Unless Otherwise Specified			
.X	~	±0.38	
.XX	~	±0.25	
.XXX	~	±0.20	
Angle	~	± 3°	

Drawing By	Data
Peter	04/11-'11
Reviewed By	Data
Sharon	04/11-'11
Approval By	Data
Jason	04/12-'11

SINGATRON U.S.A.

Date	04/11-'11	Title	SATA 7+15P Odd Row DIP Type (High 9.85mm)Plastic Post Distance 38.73mm Female
Sheet	1 of 1		
Third Angle Projection		Drawing No.	2SAT-F22-V5D-H9 REV B