Rev.	Description	Date	Drawn	Checked

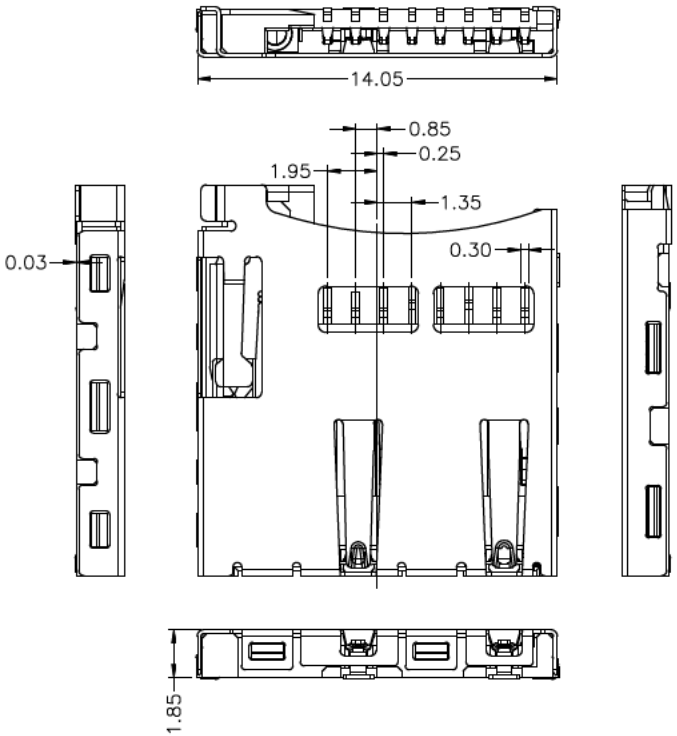

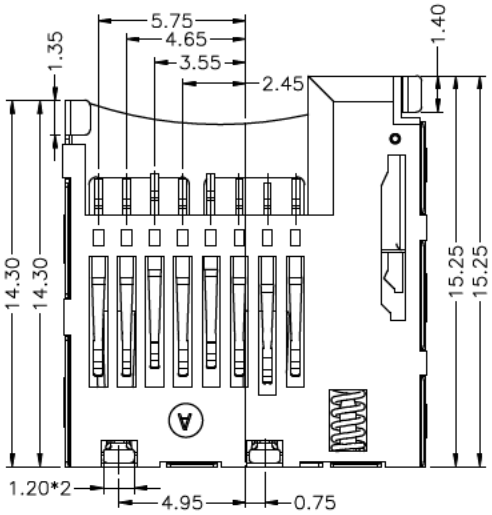

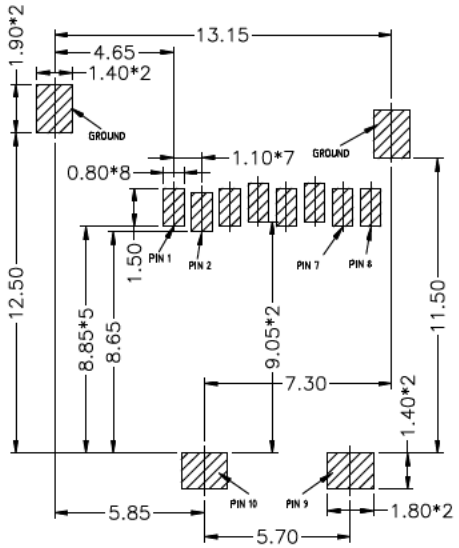

RECOMMENDED PCB LAYOUT
(ALL TOLERANCE ARE ±0.05)

CIRCUIT:	
CD GROUND	CD GROUND
WITHOUT CARD	CARD INSERTED

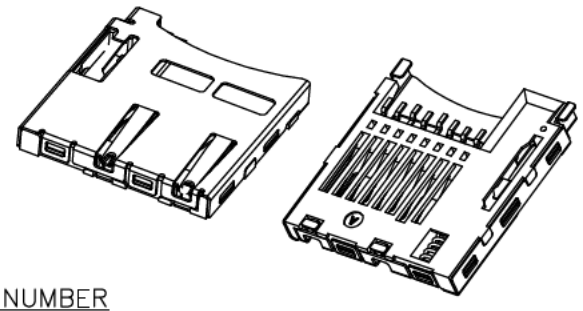

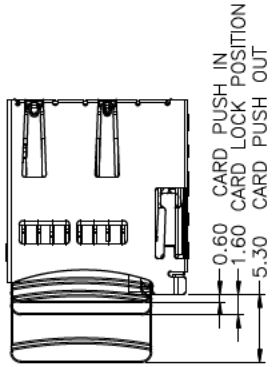

MATERIALS

HOUSING: HI–TEMP. PLASTIC (UL 94V–0)
SHELL: STAINLESS STEEL
LINK: STAINLESS STEEL
SPRING: PAINO WIRE
TERMINAL: COPPER ALLOY, GOLD PLATED ON CONTACT AREA
TIN PLATING ON SOLDER TAIL

SPECIFICATION

CURRENT RATING: 0.5 AMP MAX
DIELECTRIC WITHSTANDING: 500V AC FOR ONE MINUTE
CONTACT RESISTANCE: 100m OHMS MAX
INSULATION RESISTANCE: 1000M OHMS MIN AT DC 500V
OPERATION TEMPERATURE: −20°C~+85°C

Pin No.		MICRO SD
PIN1	DAT2	1P
PIN2	CD/DAT3	2P
PIN3	CMD	3P
PIN4	VDD	4P
PIN5	CLK	5P
PIN6	VSS	6P
PIN7	DAT0	7P
PIN8	DAT1	8P
PIN9	CARD DETECT	
PIN10		

PART NUMBER

2SD40KDH – 0 8 * T – 1 2 L L

SERIES — 2SD40KDH
NO. OF POS. — 08
CONTACT PLATED OPTION — *
TIN PLATING ON SOLDER TAIL — T
TAPE REEL PACKAGE — 12
LEAD FREE — LL

CONTACT PLATED OPTION:
1: GOLD FLASH
2: 5u" GOLD
3: 10u" GOLD
4: 15u" GOLD
6: 30u" GOLD

GENERAL TOLERANCE: .X ±0.30 Ang. ±3° .XX ±0.20 .XXX ±0.10	DRAWN: SHC	SINGATRON (U.S.A.)	
	APPROVED:		
UNIT: mm / SCALE: Free	DATE:	TITLE	MICRO SD (T-FLASH) SOCKET, PCB MOUNT, SMT, METAL SHIELD, PUSH-PUSH TYPE
PROJECTION:	VERSION:		
DWG. No. 40KD-024		PART No.	2SD40KDH - 0 8 * T - 1 2 L L