REV.	ECN NO OR DESCRIPTION	REVISED	DATE
D	ECN NO: T060242	LIAO	2006.08.14
E	修正D/C擺放位置與實物相符	HAIHUA	7/30'07
F	修正塑膠材質描述 ECN.No.:C080026	CHARLIE	01/23'08
G	△G 料號瘦身，ECN NO.:T0900047	KENSON	8/25'09

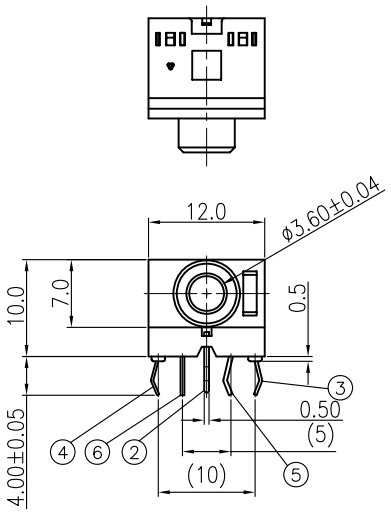

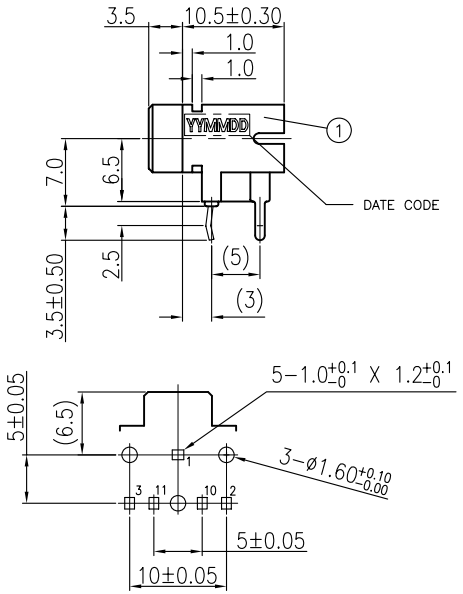

PCB LAYOUT TOLERANCE±0.05

SCALE 1:1

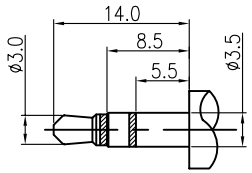

RECOMMENDED PLUG

SPECIFICATIONS:

1. INSULATION RESISTANCE TO BE NOT LESS THAN 50 MEGOHMS R.M.S. AT 250 VOLTS.
2. MAXIMUM CONTACT RESISTANCE 30 MILLIOHMS.
3. JACK SHALL WITHSTAND 250 VOLTS BETWEEN ANY ADJACENT TERMINAL FOR 1 MINUTE.
4. JACK SHALL WITHSTAND 5,000 CYCLES OF INSERTION AND WITHDRAWAL WITH MATE PLUG OR GAUGE PLUG AFTER TESTING CONTACT RESISTANCE SHALL NOT EXCEED 0.1 OHMS.
5. INSERTION FORCE
   1) INITIAL: 0.3KG−2.5KG.
   2) AFTER 5,000 CYCLES TEST: ±30% OF INITIAL VALUE.
6. WITHDRAWAL FORCE
   1) INITIAL: 0.3KG − 2.5KG
   2) AFTER 5,000 CYCLES TEST: ±30% OF INITIAL VALUE.
7. MEASURING CONDITIONS:
   1) TEMPERATURE: FROM 5°C TO 40°C.
   2) RELATIVE HUMIDITY: FROM 40% TO 85%
8. RESISTANCE TO SLOLDERING HEAT:
   LEADS TO BE IMMERSED IN MOLTEN SOLDER 260°C FOR 10 SECONDS @1.57mm FROM BODY WITH NO DEGRADATION OF ELECTRICAL OR MECHANICAL SPECIFICATION.
9. * :SEE DRAWING NO.
10. SOLDER HEAT RESISTANCE: WAVE SOLDERING 260°C 10 SECS.
11. TO CONFORM TO THE SINGATRON HSF SPECIFICATION.
12. GREEN PRODUCT IDENTIFICATION MARK IN JACK: △
13. GREEN PRODUCT IDENTIFICATION LABEL IN PACKING: G.P. PASS
14. FOR WAVE SOLDERING LEAD−FREE PROCESS.
15. PRINTED DATE CODE" YYMMDD " ON TOP OF CONNECTOR.
    DATE CODE: YYMMDD
    - DD: DAY
    - MM: MONTH
    - YY: YEAR

CIRCUIT:

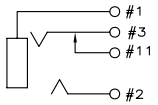

FIG. 2

NO	DESCRIPTION	QTY	MATERIAL	PLATING & COLOR
F	SHUNT TERMINAL B	*	BRASS 0.4t	SILVER PLATING
E	SHUNT TERMINAL A	*	BRASS 0.4t	SILVER PLATING
D	RING SPRING	*	COPPER ALLOY 0.25t	SILVER PLATING
C	TIP SPRING	*	COPPER ALLOY 0.3t	SILVER PLATING
B	EARTH TERMINAL	1	BRASS 0.5t	SILVER PLATING
A	BODY	1	THERMOPLASTIC	BLACK COLOR

"TABLE I" △G

DRAWING	CIRCUIT	TIP SPRING	RING SPRING	SHUT TERMINAL A	SHUNT TERMINAL B
2SJ−05111N23	FIG. 2	1	1		1

UNLESS OTHERWISE SPECIFED TOLERANCES

DECIMALS: X :±0.5, X.X :±0.3, X.XX :±0.2

ANGLES: X :±2°, X.X :±1°

Singatron Electronic(Chung-Shan) Co., Ltd.
信音電子(中山)有限公司

TITLE	ø3.5 PHONE JACK		
DWN	KENSON 8/25'09	PART NO: 2SJ−051X1N23	
CHKD	HARVEY 8/25'09	SCALE:1:1	UNIT: mm
APVD	ROBIN 8/25'09	SIZE: A3	SHEET: 10F1	REV: G

CUSTOMER COPY

文件編號: RD−06−035−2A