REV.	ECN NO OR DESCRIPTION	REVISED	DATE
T	PDR NO.20070130-2	LULU	2007.04.12
A	PDR RELEASE	LULU	2007.04.19
B	ECN NO: L080071	Johnson	2008.06.23

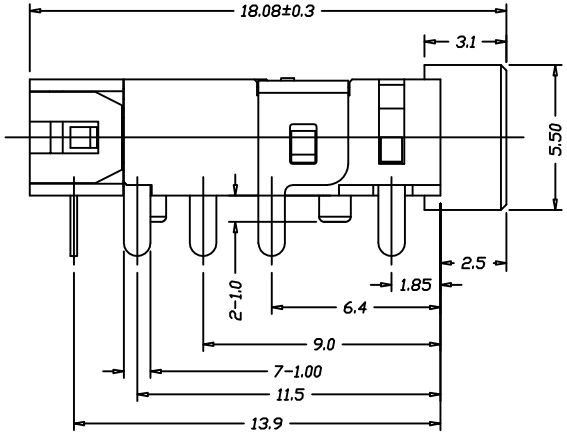

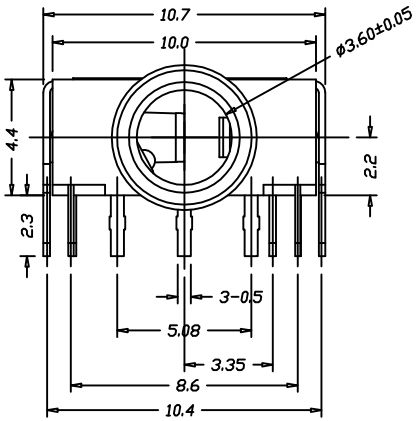

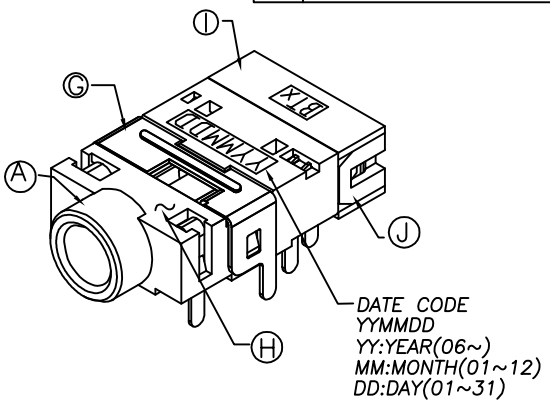

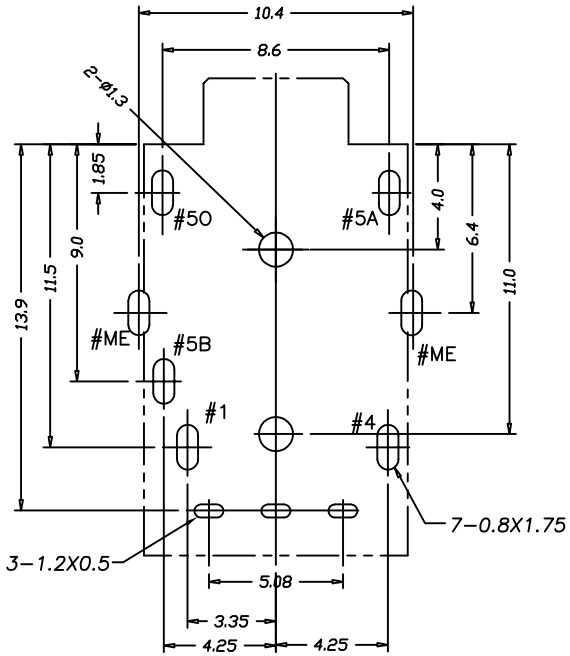

RECOMMENDED PCB LAYOUT
<TOP VIEW>
NOTE : TOLERANCE FOR PCB LAYOUT IS ± 0.05

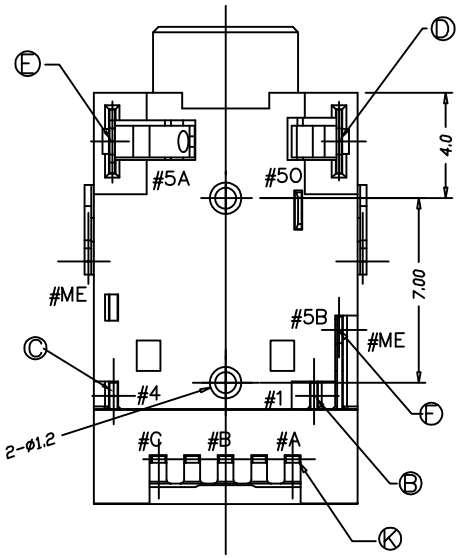

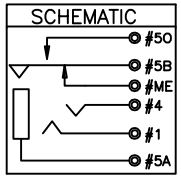

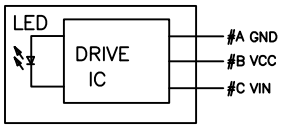

SPECIFICATIONS :
1.SEE 2SJ-A001-A01 SPECIFICATIONS.
2.PACKING: TAPE & REEL
3.TO CONFORM TO THE "SE-01-001" & "ROHS DIRECTIVE"
4.GREEN PRODUCT IDENTIFICATION LABEL IN PACKING: G.P. PASS
5.SOLDER HEAT RESISTANCE : 260°C 10 SECS.

NO	DESCRIPTION	QTY	MATERIAL	PLATING & COLOR
K	IC DRIVE	1		
J	COVER	1	PA9T UL94V-0	BLACK COLOR
I	CASE	1	PA9T UL94V-0	BLACK COLOR
H	INSULATOR	1	PA9T UL94V-0	BLACK COLOR
G	SHELL	1	PHOSPHOR BRONZE 0.25t	GOLD FLASH
F	EARTH	1	PHOSPHOR BRONZE 0.25t	GOLD FLASH
E	EARTH SPRING B	1	PHOSPHOR BRONZE 0.2t	GOLD FLASH
D	EARTH SPRING A	1	PHOSPHOR BRONZE 0.3t	GOLD FLASH
C	TIP SPRING	1	PHOSPHOR BRONZE 0.2t	GOLD FLASH
B	RING SPRING	1	PHOSPHOR BRONZE 0.25t	GOLD FLASH
A	HOUSING	1	PA9T UL94V-0	GREEN#3415C

UNLESS OTHERWISE SPECIFED TOLERANCES

DECIMALS: X :±0.5, X.X :±0.3, X.XX :±0.2
ANGLES: X :±2°, X.X :±1°

Singatron Enterprise Co., Ltd.
信音企業股份有限公司

TITLE	OPTO JACK CIRCULAR TYPE 3.5ø,SWITCH TYPE		
DWN	JOHNSON 2008.6.23	PART NO.2SJ-A001-A01	
CHKD	JOHNSON 2008.6.23	SCALE:2/1	UNIT: mm
APVD	JOHNSON 2008.6.23	SIZE: A3	SHEET:1OF 1	REV: B

CUSTOMER COPY

文件編號 RD-06-035-1A