REV.	ECN NO OR DESCRIPTION	REVISED	DATE
B	ECR NO:S100912	ANDY	2010.10.13
C	ECN NO:S110320	Swina	2011.03.10
D	ECN NO:S110307	Sean	2011.10.13

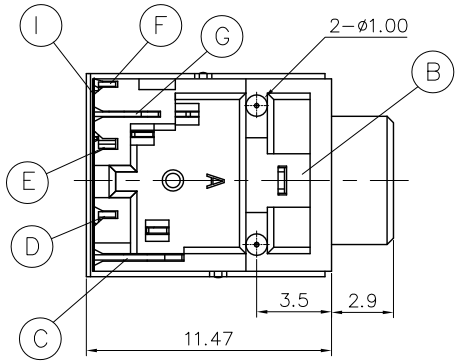

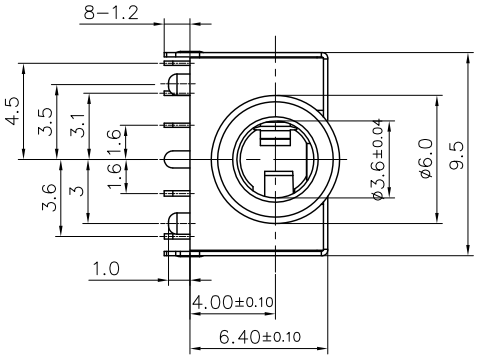

SPECIFICATIONS:

1. INSULATION RESISTANCE BETWEEN ANY ADJACENT OPEN CIRCUIT TERMINAL SHELL NOT BE LESS THAN 100MΩ MEASURED BY 500 V DC MEGGER.
2. CONTACT RESISTANCE : 30mΩ MAX. (200mΩ MAX:METAL TO EARTH TO SHIELDING)
3. INSULATION VOLTAGE WITHSTAND: 500V AC FOR ONE MINUTE.
4. UNLESS OTHERWISE SPECIFIED. TEST IS TO BE MADE AT 5-35°C IN TEMPERATURE AND 45-85% IN HUMIDITY. BUT,IF ANY VAGUE DATA IS OCCURED ON TEST RESULT, ANOTHER TEST SHALL BE MADE AT 20°C±2°C IN TEMP., 60-70% IN HUMIDITY.
5. LIFE TEST: 5,000 CYCLES MIN. (NON-LOAD)
6. INSERTION FORCE: 0.4 - 3KGF.
7. WITHDRAWAL FORCE: 0.3 - 2KGF.
8. AFTER LIFE TEST, CONTACT RESISTANCE: 50mΩ MAX.
9. AFTER HUMIDITY TEST, INSULATION RESISTANCE: 50MΩ MIN.
10. MARKING: MARK" " ON TOP OF CONNECTOR.
11. PACKAGING : TAPE & REEL.
12. TO CONFORM TO SINGATRON HAZARDOUS SUBSTANCE FREE SPEC
13. HALOGEN FREE PRODUCT IDENTIFICATION MARK ON JACK:
14. HALOGEN FREE PRODUCT IDENTIFICATION LABEL ON PACKAGING:
15. FOR LEAD-FREE PROCESS.

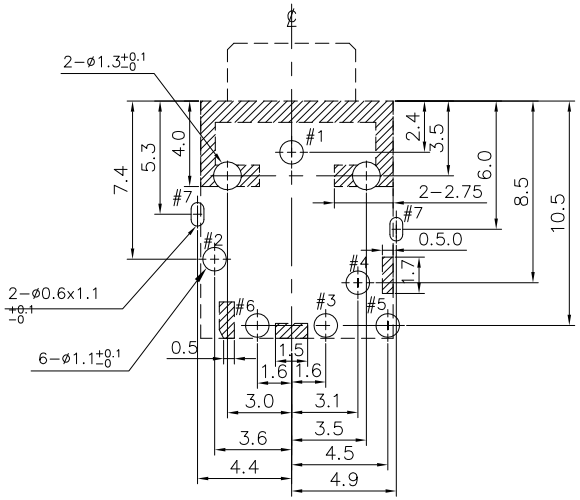

RECOMMENDED PCB LAYOUT
TOP VIEW (TOL.±0.05)

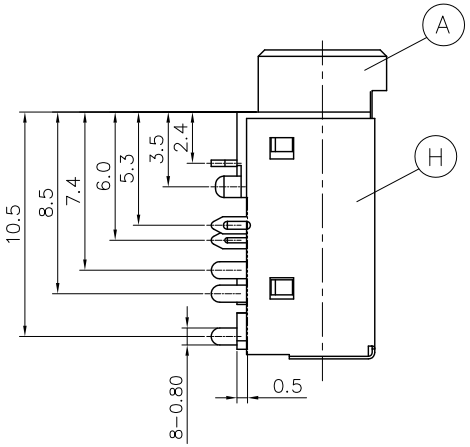

NO	DESCRIPTION	QTY	MATERIAL	PLATING & COLOR
I	MYLAR	1		YELLOW
H	SHIELDING	1	COPPER ALLOY 0.2t	Ni 60u"
G	TRANSFER TERMINAL	1	PHOSPHOR BRONZE 0.2t	GOLD FLASH ON CONTACT AREA 120u" Sn ON SOLDER TAIL AREA ALL OVER 50u" Ni.
F	BREAK TERMINAL	1	PHOSPHOR BRONZE 0.2t	
E	RING SPRING	1	PHOSPHOR BRONZE 0.2t	
D	SHUNT TERMINAL-A	1	BRASS 0.25t	GOLD FLASH ON CONTACT AREA OVER Ni 50u".
C	TIP SPRING	1	PHOSPHOR BRONZE 0.25t	Ag 20u" Min Over Ni 40~80μ".
B	EARTH	1	COPPER ALLOY 0.3t	
A	BODY	1	HIGH TEMP.THERMOPLASTIC UL 94V-0	BLACK

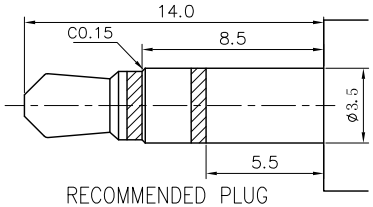

RECOMMENDED PLUG
3-POLE

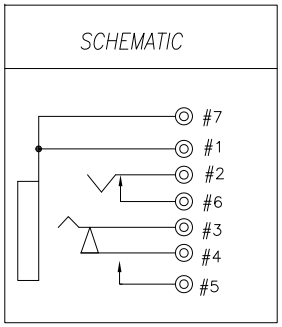

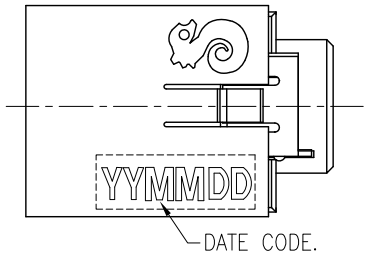

UNLESS OTHERWISE SPECIFED TOLERANCES

DECIMALS:
x :±0.5
X.X :±0.3
X.XX :±0.2

ANGLES:
X :±2°
X.X :±1°

Singatron Enterprise Co., Ltd.
信音企業股份有限公司

TITLE	3.5ø PHONE JACK		
DWN	Sean	PART NO. 2SJ-B351-005	
CHKD	TOM	SCALE:1:1	UNIT: MM
APVD	TONY	SIZE: A3	SHEET:1 OF 1 REV: D

CUSTOMER COPY

文件編號 RD-06-043-A