REV.	ECN NO OR DESCRIPTION	REVISED	DATE
A	PDR No:20070508-1	RAY	2007.05.09

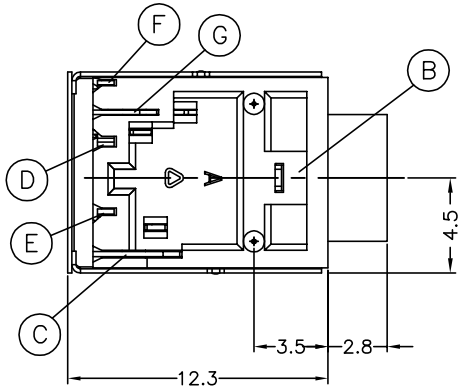

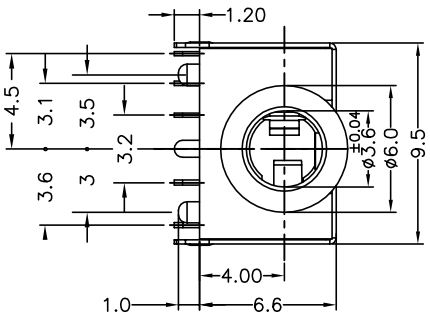

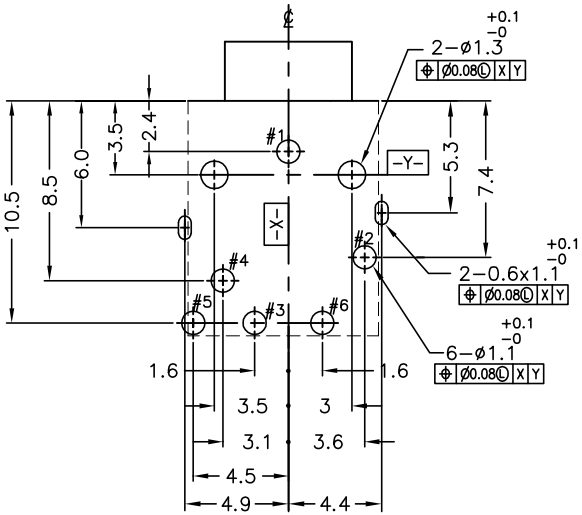

RECOMMENDED PCB LAYOUT

SOLDER SIDE(TOL.±0.05)

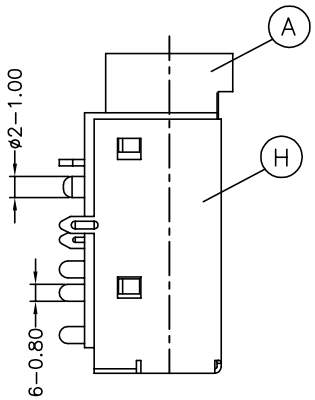

SPECIFICATIONS :

1. INSULATION RESISTANCE BETWEEN ANY ADJACENT OPEN CIRCUIT TERMINAL SHELL NOT BE LESS THAN 100MΩ MEASURED BY 500 VDC MEGGER.
2. CONTACT RESISTANCE : 30mΩ MAX.
3. INSULATION VOLTAGE WITHSTAND : 500V AC FOR ONE MINUTE.
4. UNLESS OTHERWISE SPECIFIED. TEST IS TO BE MADE AT 5-35°C IN TEMPERATURE AND 45-85% IN HUMIDITY. BUT,IF ANY VAGUE DATA IS OCCURED ON TEST RESULT, ANOTHER TEST SHALL BE MADE AT 20°C±2°C IN TEMP., 60-70% IN HUMIDITY.
5. LIFE TEST : 5,000 CYCLES MIN. (NON-LOAD)
6. INSERTION FORCE :0.4 - 3Kg.
7. WITHDRAWAL FORCE :0.3 - 2Kg.
8. AFTER LIFE TEST, CONTACT RESISTANCE: 50mΩ MAX.
9. AFTER HUMIDITY TEST, INSULATION RESISTANCE :50MΩ MIN.
10. MARKING: MARK" " ON TOP OF CONNECTOR.
11. PACKING : TAPE & REEL.
12. TO CONFORM TO THE "SE-01-001" & "ROHS DIRECTIVE"
13. GREEN PRODUCT IDENTIFICATION MARK IN JACK:
14. GREEN PRODUCT IDENTIFICATION LABEL IN PACKING: **G.P. PASS**
15. FOR LEAD-FREE PROCESS.

2SJ-B351-00X

- 1: PINK COLOR (PAN.#701C)
- 2: BLUE COLOR (PAN.#284C)

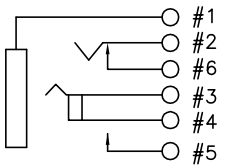

ELECTRICAL CIRCUIT

REVERSE

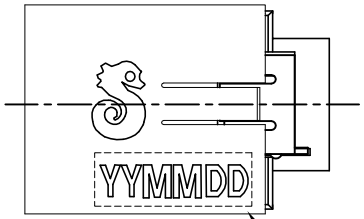

DATE CODE.

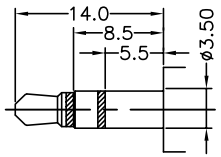

RECOMMENDED PLUG

3-POLE

NO	DESCRIPTION	QTY	MATERIAL	PLATING & COLOR
Ⓗ	SHIELDING	1	COPPER ALLOY 0.2t	NICKEL PLATING
Ⓖ	TRANSFER TERMINAL	1	PHOSPHOR BRONZE 0.2t	SILVER PLATING
Ⓕ	BREAK TERMINAL	1	PHOSPHOR BRONZE 0.2t	SILVER PLATING
Ⓔ	SHUNT TERMINAL-A	1	BRASS 0.25t	SILVER PLATING
Ⓓ	RING SPRING	1	PHOSPHOR BRONZE 0.2t	SILVER PLATING
Ⓒ	TIP SPRING	1	PHOSPHOR BRONZE 0.25t	SILVER PLATING
Ⓑ	EARTH	1	COPPER ALLOY 0.3t	SILVER PLATING
Ⓐ	BODY	1	HIGH TEMP.THERMOPLASTIC UL 94V-0	SEE ORDERING P/N

UNLESS OTHERWISE SPECIFED TOLERANCES

DECIMALS: x :±0.5, X.X :±0.3, X.XX :±0.2

ANGLES: X :±2°, X.X :±1°

Singatron Enterprise Co., Ltd.
信音企業股份有限公司

TITLE	3.5ø PHONE JACK		
DWN	RAY 2007.05.09	PART NO. 2SJ-B351-00X	
CHKD	LUSSEN2007.05.25	SCALE:4/1	UNIT: MM
APVD	SANDY 2007.05.25	SIZE: A3	SHEET:1 OF 1 REV:A

CUSTOMER COPY

文件編號 RD-06-035-1A