REV.	ECN NO OR DESCRIPTION	REVISED	DATE
A	PDR NO.T141120-5A	Mars	2015.09.08

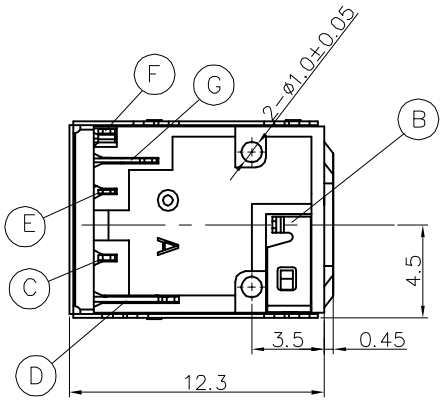

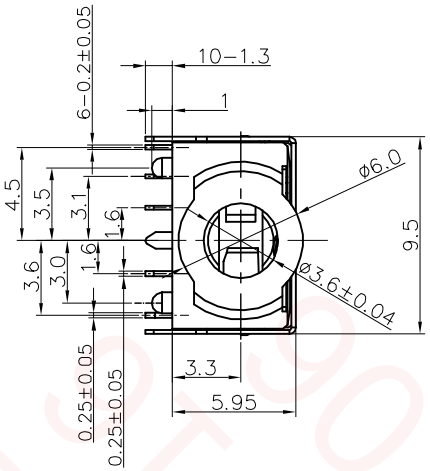

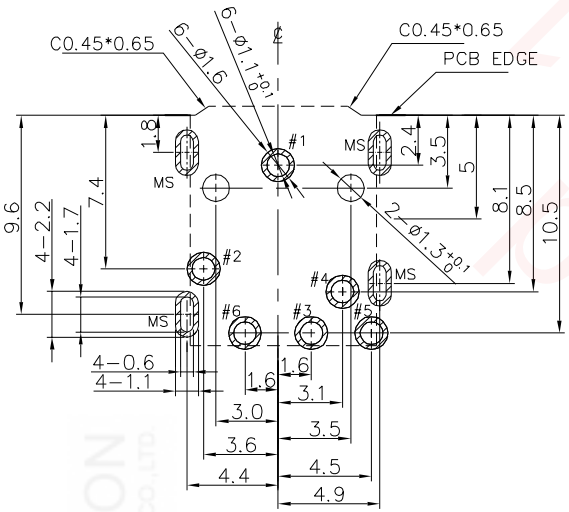

RECOMMENDED PCB LAYOUT
TOP VIEW(TOL.±0.05)

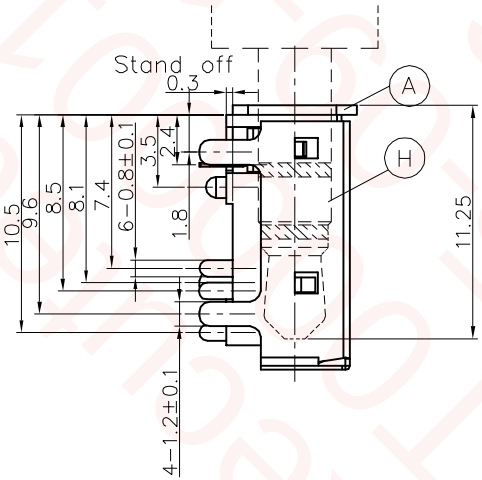

SPECIFICATIONS:

1. INSULATION RESISTANCE BETWEEN ANY ADJACENT OPEN CIRCUIT TERMINAL SHELL NOT BE LESS THAN 100MΩ MEASURED BY 500 VDC .
2. CONTACT RESISTANCE: 30mΩ MAX.
3. INSULATION VOLTAGE WITHSTAND: 500V AC FOR ONE MINUTE.
4. UNLESS OTHERWISE SPECIFIED. TEST IS TO BE MADE AT 5-35°C IN TEMPERATURE AND 45-85% IN HUMIDITY. BUT,IF ANY VAGUE DATA IS OCCURED ON TEST RESULT, ANOTHER TEST SHALL BE MADE AT 20°C±2°C IN TEMP., 60-70% IN HUMIDITY.
5. LIFE TEST : 5,000 CYCLES MIN. (NON-LOAD)
6. INSERTION FORCE: 0.4 - 3Kg.
7. WITHDRAWAL FORCE: 0.3 - 3Kg.
8. AFTER LIFE TEST, CONTACT RESISTANCE: 50mΩ MAX.
9. AFTER HUMIDITY TEST, INSULATION RESISTANCE :50MΩ MIN.
10. METAL,EARTH AND SHIELDING MUST BE CONDUCT.
11. MARKING: MARK" " ON TOP OF CONNECTOR.
12. PACKAGING : TAPE & REEL.
13. TO CONFORM TO SINGATRON HAZARDOUS SUBSTANCE FREE SPEC.
14. HALOGEN FREE PRODUCT IDENTIFICATION MARK ON PRODUCT:
15. HALOGEN FREE PRODUCT IDENTIFICATION LOGO ON PACKAGING:
16. FOR LEAD-FREE PROCESS.

NO	DESCRIPTION	QTY	MATERIAL	PLATING & COLOR
H	SHIELDING	1	C5191-H 0.2t	Ni 60u" MIN PLATING
G	TRANSFER TERMINAL	1	C5210-SH 0.2t	GOLD FLASH ON CONTACT AREA MATTE Sn 120u" ON SOLDER ALL OVER Ni 50u".
F	BREAK TERMINAL	1	C5191-H 0.2t	
E	RING SPRING	1	C5210-EH 0.2t	Au 30u" ON CONTACT AREA MATTE Sn 120u" ON SOLDER ALL OVER Ni 50u".
D	TIP SPRING	1	C5210-SH 0.25t	
C	SHUNT TERMINAL-A	1	C2680-H 0.25t	GOLD FLASH ON CONTACT AREA OVER Ni 50u".
B	EARTH	1	C5210-EH 0.2t	Au 30u" MIN OVER Ni 50u"
A	BODY	1	PA10T+30% GF UL94-V0 UL 94V-0	BLACK

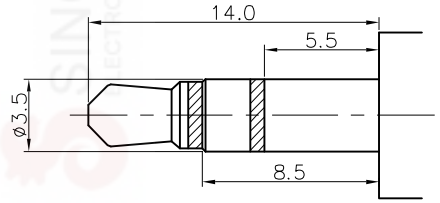

3P PLUG

SCHEMATIC

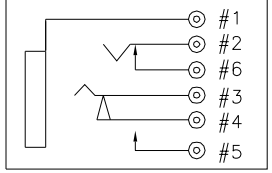

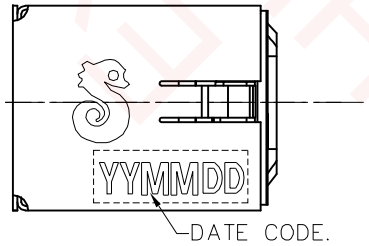

UNLESS OTHERWISE SPECIFED TOLERANCES

DECIMALS: X :±0.5, X.X :±0.3, X.XX :±0.2

ANGLES: X :±2°, X.X :±1°

Singatron Enterprise Co., Ltd.
信音企業股份有限公司

TITLE	3.5ø PHONE JACK			
DWN	MARS	PART NO.2SJ-P351-S07F		
CHKD	BRUCE	SCALE:4:1	UNIT: mm	
APVD	LUSSEN	SIZE: A3	SHEET:1 OF 1	REV: A

CUSTOMER COPY

文件編號: RD-06-043-A