REV.	ECN NO OR DESCRIPTION	REVISED	DATE
A	PRODUCT RELEASE	EVEN	2004.11.19

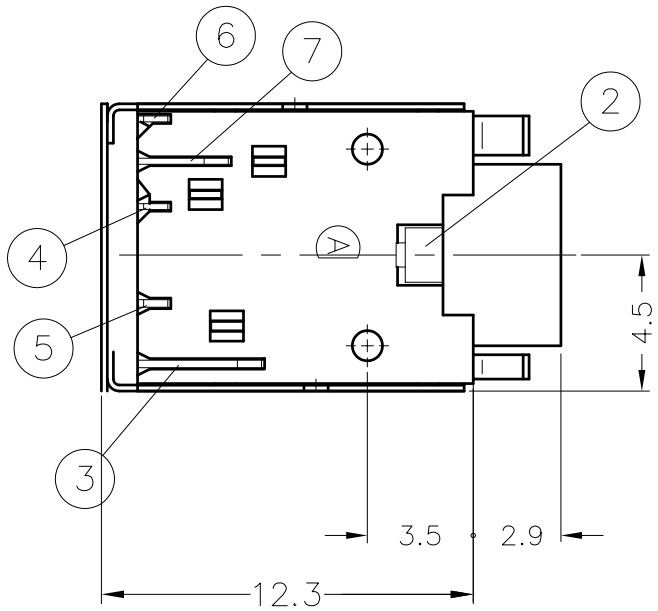

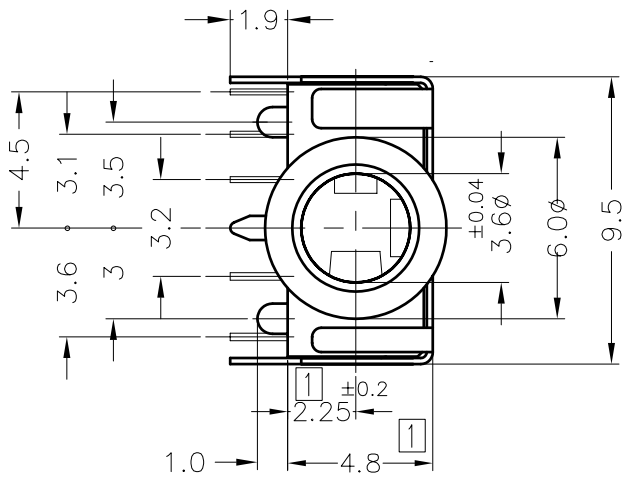

SPECIFICATIONS:

1. INSULATION RESISTANCE BETWEEN ANY ADJACENT OPEN CIRCUIT TERMINAL SHELL NOT BE LESS THAN 100MΩ MEASURED BY 500 VDC MEGGER.
2. CONTACT RESISTANCE: 30mΩ MAX.
3. INSULATION VOLTAGE WITHSTAND: 500V AC FOR ONE MINUTE.
4. UNLESS OTHERWISE SPECIFIED. TEST IS TO BE MADE AT 5–35°C IN TEMPERATURE AND 45–85% IN HUMIDITY. BUT,IF ANY VAGUE DATA IS OCCURED ON TEST RESULT, ANOTHER TEST SHALL BE MADE AT 20°C±2°C IN TEMP., 60–70% IN HUMIDITY.
5. LIFE TEST: 5,000 CYCLES MIN. (NON–LOAD)
6. INSERTION FORCE:0.4 – 3Kg.
7. WITHDRAWAL FORCE:0.3 – 2Kg.
8. AFTER LIFE TEST, CONTACT RESISTANCE: 50mΩ MAX.
9. AFTER HUMIDITY TEST, INSULATION RESISTANCE:50MΩ MIN.
10. MARKING: MARK" " ON TOP OF CONNECTOR.
11. PACKING : TAPE & REEL.
12. TO CONFORM TO THE "SE–01–001" & "ROHS DIRECTIVE"
13. GREEN PRODUCT IDENTIFICATION MARK IN JACK:
14. GREEN PRODUCT IDENTIFICATION LABEL IN PACKING: **G.P. PASS**
15. FOR LEAD–FREE PROCESS.

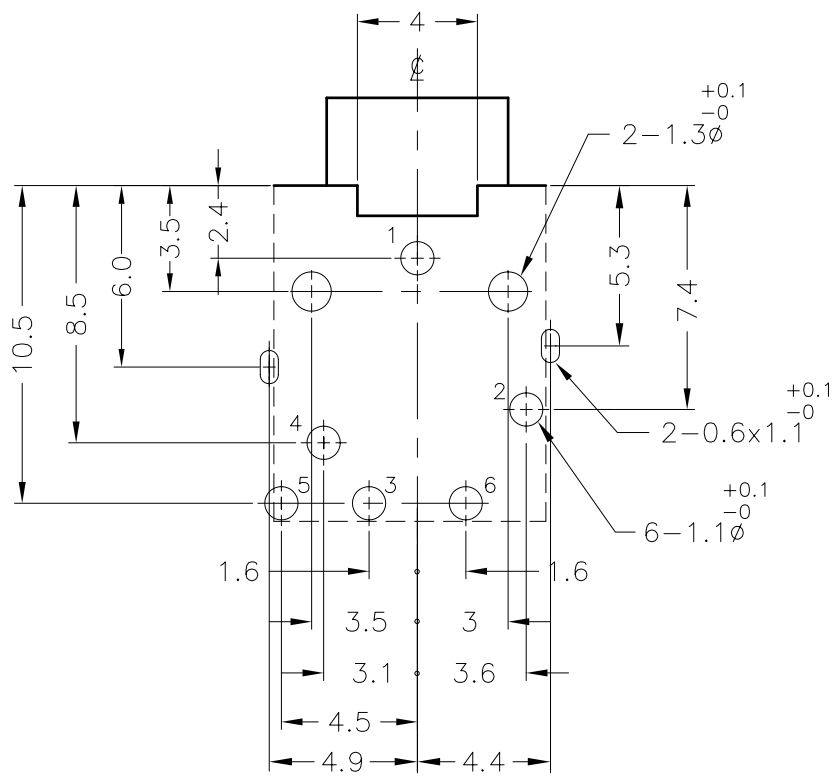

RECOMMENDED PCB LAYOUT

SOLDER SIDE

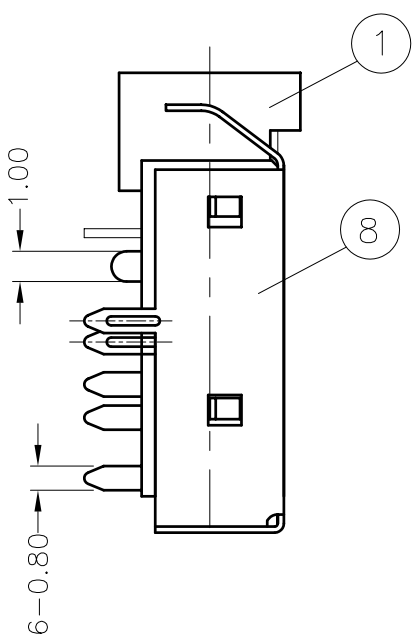

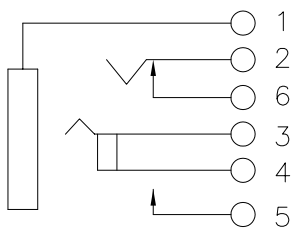

ELECTRICAL CIRCUIT

REVERSE

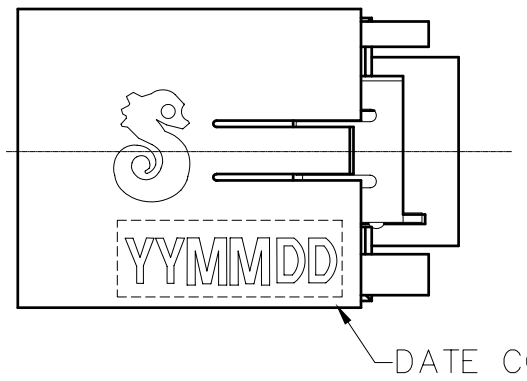

NO	DESCRIPTION	QTY	MATERIAL	PLATING & COLOR
8	SHIELDING	1	PHOSPHOR BRONZE 0.2t	NICKEL PLATING
7	TRANSFER TERMINAL	1	PHOSPHOR BRONZE 0.2t	SILVER PLATING
6	BREAK TERMINAL	1	PHOSPHOR BRONZE 0.2t	SILVER PLATING
5	SHUNT TERMINAL–A	1	BRASS 0.25t	SILVER PLATING
4	RING SPRING	1	PHOSPHOR BRONZE 0.2t	SILVER PLATING
3	TIP SPRING	1	PHOSPHOR BRONZE 0.25t	SILVER PLATING
2	EARTH	1	COPPER ALLOY 0.3t	SILVER PLATING
1	BODY	1	HIGH TEMP.THERMOPLASTIC UL 94V–0	PINK COLOR (PANTONE NO.701C)

UNLESS OTHERWISE SPECIFED TOLERANCES

DECIMALS: x :±0.3, X.X :±0.2, X.XX :±0.1

ANGLES: X :±2°, X.X :±1°

Singatron Enterprise Co., Ltd.
信音企業股份有限公司

TITLE	3.5ø PHONE JACK			
DWN	EVEN 2004.11.19	PART NO. 2SJ–S351–001		
CHKD		SCALE:4/1	UNIT: MM	
APVD	ANDREW 2004.11.19	SIZE: A3	SHEET:1 OF 1	REV:A

Form: 1