REV.	ECN NO OR DESCRIPTION	REVISED	DATE
A	PDR NO:T080624-1A	Bruce	2008.07.07
B	ECN NO.T080204	LILI	2008.12.29
C	ECN NO.S100329	Angel	2010.05.12

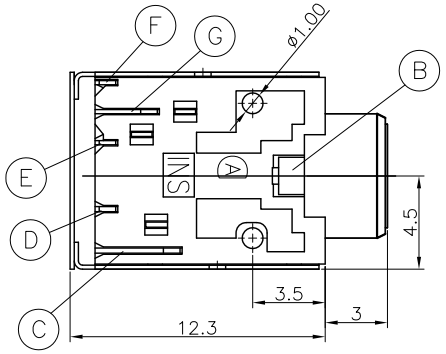

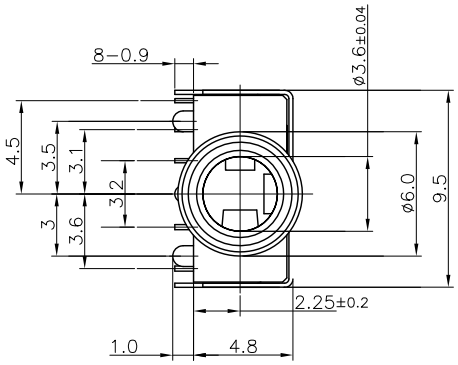

SPECIFICATIONS:

1. INSULATION RESISTANCE BETWEEN ANY ADJACENT OPEN CIRCUIT TERMINAL SHELL NOT BE LESS THAN 100MΩ MEASURED BY 500 VDC MEGGER.
2. CONTACT RESISTANCE: 30mΩ MAX. (200mΩ MAX:METAL TO EARTH TO SHIEDING)
3. INSULATION VOLTAGE WITHSTAND: 500V AC FOR ONE MINUTE.
4. UNLESS OTHERWISE SPECIFIED. TEST IS TO BE MADE AT 5-35°C IN TEMPERATURE AND 45-85% IN HUMIDITY. BUT,IF ANY VAGUE DATA IS OCCURED ON TEST RESULT, ANOTHER TEST SHALL BE MADE AT 20°C±2°C IN TEMP., 60-70% IN HUMIDITY.
5. LIFE TEST: 5,000 CYCLES MIN. (NON-LOAD)
6. INSERTION FORCE:0.4 - 3Kg.
7. WITHDRAWAL FORCE: 0.3 - 2Kg.
8. AFTER LIFE TEST, CONTACT RESISTANCE: 50mΩ MAX.
9. AFTER HUMIDITY TEST, INSULATION RESISTANCE: 50MΩ MIN.
10. MARKING: MARK" " ON TOP OF CONNECTOR.
11. PACKAGING : TAPE & REEL.
12. TO CONFORM TO SINGATRON HAZARDOUS SUBSTANCE FREE SPEC
13. HALOGEN FREE PRODUCT IDENTIFICATION MARK ON PRODUCT: ◎
14. HALOGEN FREE PRODUCT IDENTIFICATION LOGO ON PACKING:
15. FOR LEAD-FREE PROCESS.

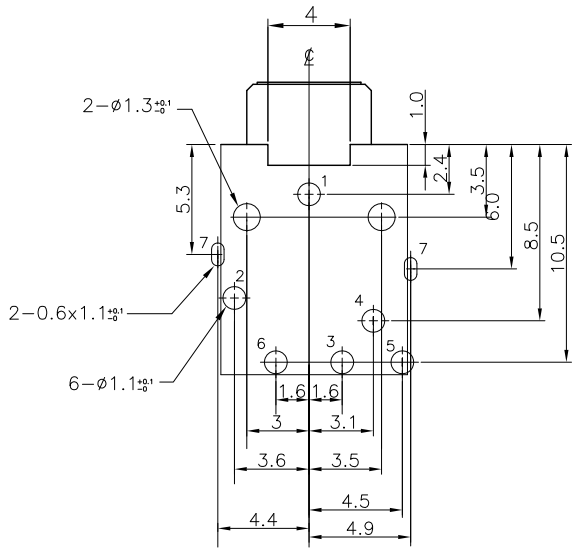

RECOMMENDED PCB LAYOUT
TOP VIEW(TOL.±0.05)

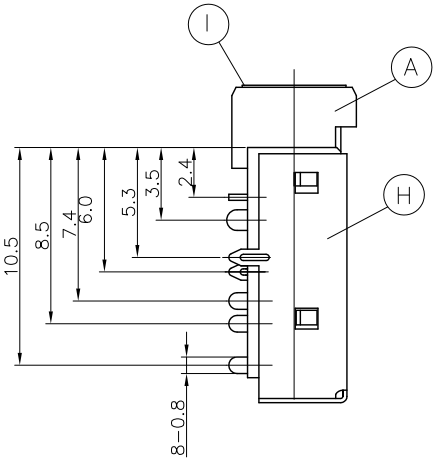

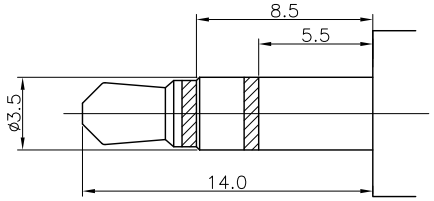

3P PLUG

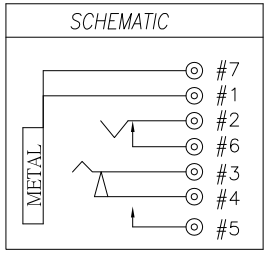

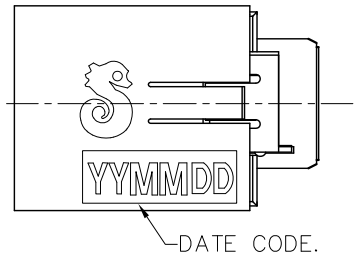

NO	DESCRIPTION	QTY	MATERIAL	PLATING & COLOR
I	METAL	1	BRASS	Ni 60u" Min OVER Cu 80u"Min
H	SHIELDING	1	PHOSPHOR BRONZE 0.2t	Ni 60u" Min OVER Cu 80u"Min
G	TRANSFER TERMINAL	1	PHOSPHOR BRONZE 0.2t	120u" Sn ON SOLDER GOLD FLASH ON CONTACT AREA ALL OVER 50u" Ni.
F	BREAK TERMINAL	1	PHOSPHOR BRONZE 0.2t	
E	RING SPRING	1	PHOSPHOR BRONZE 0.2t	
D	SHUNT TERMINAL-A	1	BRASS 0.25t	GOLD FLASH ON CONTACT AREA ALL OVER 50u" Ni .
C	TIP SPRING	1	PHOSPHOR BRONZE 0.25t	Ag 20μ" Min, OVER Ni 50μ".
B	EARTH	1	COPPER ALLOY 0.3t	
A	BODY	1	HIGH TEMP.THERMOPLASTIC UL 94V-0	LIME (577C)

UNLESS OTHERWISE SPECIFED TOLERANCES

DECIMALS: X :±0.5, X.X :±0.3, X.XX :±0.2
ANGLES: X :±2°, X.X :±1°

Singatron Enterprise Co., Ltd.
信音企業股份有限公司

TITLE	3.5ø PHONE JACK		
DWN	ANGEL	PART NO. 2SJ-S351-S39	
CHKD	LUSSEN	SCALE:4:1	UNIT: mm
APVD	MAX	SIZE: A3	SHEET:1 OF 1 REV: C

CUSTOMER COPY

文件編號 RD-06-043-A