REV.	ECN NO OR DESCRIPTION	REVISED	DATE
A	PRODUCE RELEASE	ZHOULQ	2011.11.07

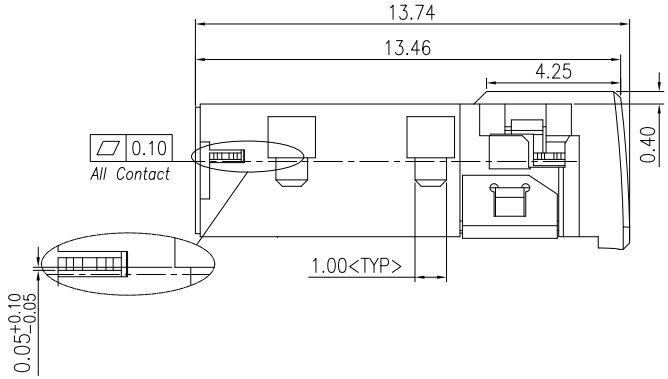

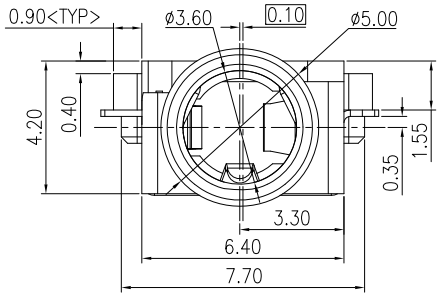

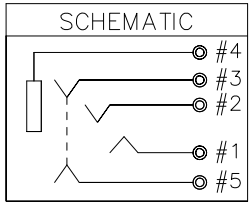

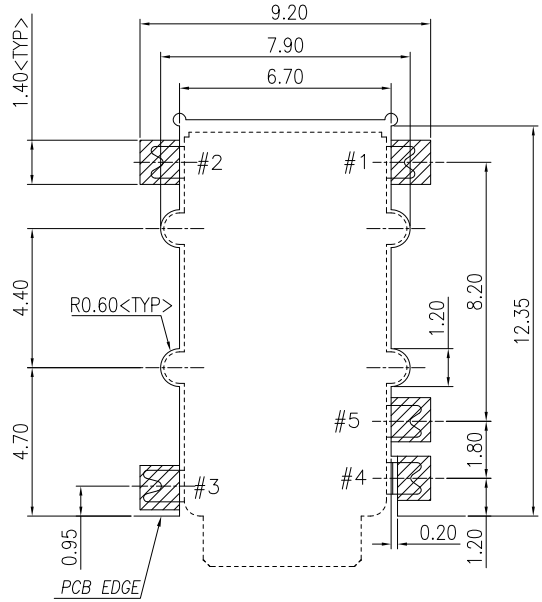

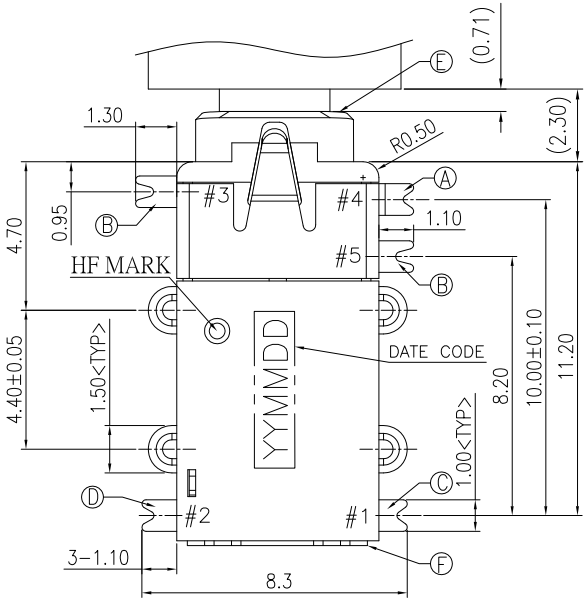

SPECIFICATIONS:

1. ELECTRICAL CHARACTERISTICS:
   1-1. RATING: 12V 1A
   1-2. CONTACT RESISTANCE: 30mΩ MAX(INITIAL).
   1-3. DIELECTRIC VOLTAGE WITHSTAND: 500V AC FOR ONE MINUTE
   1-4. INSULATION RESISTANCE: 100MΩ MIN. MEASURED BY 500 VDC
2. MECHANICAL CHARACTERISTICS:
   2-1. INSERTED FORCE : 3.0 KGF MAX.
   2-2. WITHDRAWAL FORCE : 0.3~3.0 KGF
3. LIFE TEST: 10,000 CYCLES MIN.
4. OTHER GENERAL SPEC. TO REFER "ø3.5 PHONE JACK SPEC".
5. TO CONFORM TO SINGATRON HAZARDOUS SUBSTANCE FREE SPEC.
6. HALOGEN FREE PRODUCT IDENTIFICATION MARK: ◎
7. HALOGEN FREE PRODUCT IDENTIFICATION LABEL ON PACKAGING:
8. FOR REFIOW SOLDERING LEAD-FREE PROCESS.
9. PACKAGING: TAPE & REEL.

RECOMMENDED PCB LAYOUT

TOP VIEW (TOLERANCE:±0.05)

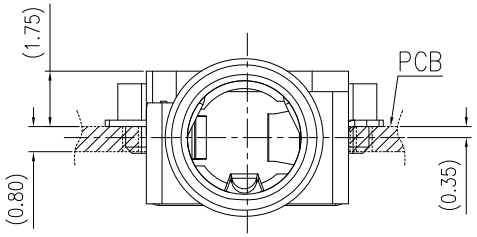

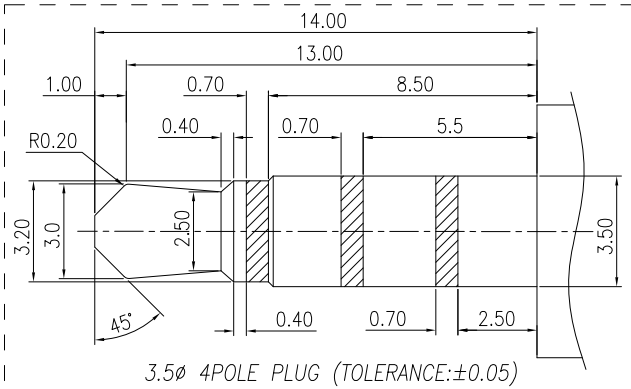

3.5ø 4POLE PLUG (TOLERANCE:±0.05)

NO	DESCRIPTION	QTY	MATERIAL	PLATING & COLOR
F	COVER	1	STAINLESS STEEL	—
E	BODY	1	THERMOPLASTIC HIGH TEMP	BLACK COLOR
D	RING SPRING A	1	COPPER ALLOY 0.2t	Gold flash on contact area and solder tail, All over Nickel Plated.
C	TIP SPRING	1	COPPER ALLOY 0.2t	
B	RING SPRING B	2	COPPER ALLOY 0.2t	
A	EARTH	1	COPPER ALLOY 0.2t	

UNLESS OTHERWISE SPECIFED TOLERANCES

DECIMALS: X :±0.5, X.X :±0.3, X.XX :±0.2

ANGLES: X :±2°, X.X :±1°

Singatron Enterprise Co., Ltd.
信音企業股份有限公司

TITLE	3.5ø PHONE JACK		
DWN	zhoulq 2011.11.10	PART NO. 2SJ2271-007321F	
CHKD	Winkon 2011.11.10	SCALE 6:1	UNIT: mm
APVD	LIAO 2011.11.10	SIZE: A3	SHEET: 1OF1 REV: A

CUSTOMER COPY

文件編號 RD-06-043-A