| REV. | ECN NO OR DESCRIPTION | REVISED | DATE |
|---|---|---|---|
| A | PRODUCT ERLEASE | ZHUHUAN | 2011.03.21 |
| B | ECN: C120193 UPDATE DRAWING | DAOWEN | 2012.06.15 |

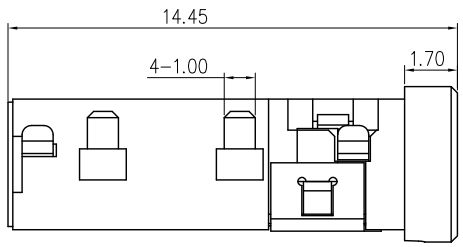


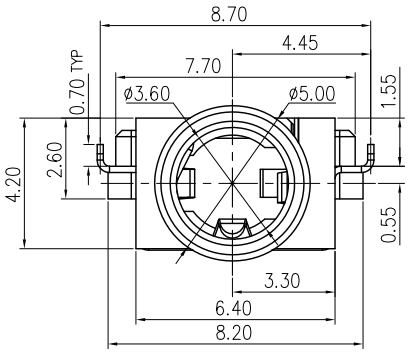


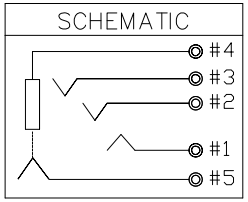


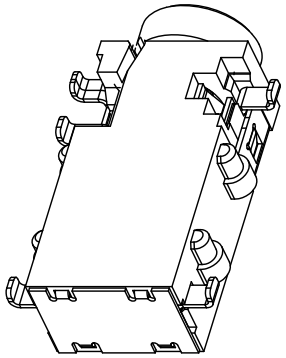

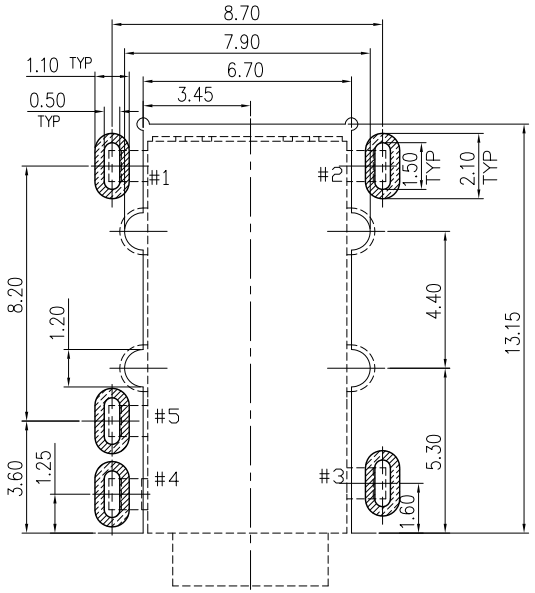


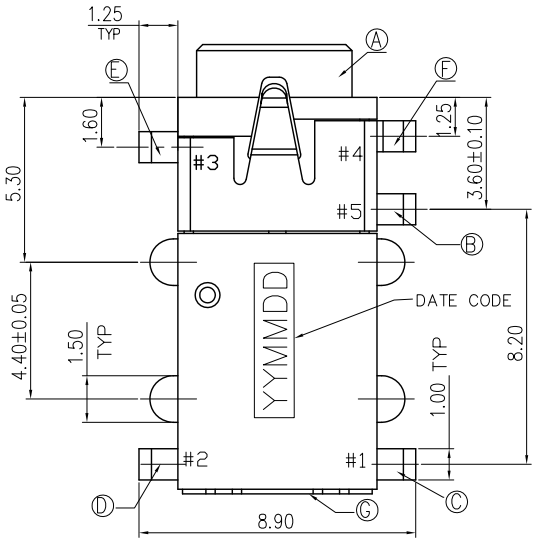


SPECIFICATIONS:

1. ELECTRICAL CHARACTERISTICS:
   1-1. RATING: 12V 1A
   1-2. CONTACT RESISTANCE: 30mΩ MAX.
   1-3. DIELECTRIC WITHSTANDING VOLTAGE: 500V AC FOR ONE MINUTE.
   1-4. INSULATION RESISTANCE: 100MΩ MIN. MEASURED BY 500 VDC
2. MECHANICAL CHARACTERISTICS:
   2-1. INSERTION FORCE : 0.3~3.0 KGF
   2-2. WITHDRAWAL FORCE : 0.3~3.0 KGF
3. LIFE TEST: 5,000 CYCLES MIN.
4. OTHER GENERAL SPEC. TO REFER "2SJ2271 SERIE SPEC".
5. TO CONFORM TO THE SINGATRON HSF SPEC.
6. HALOGEN FREE PRODUCT IDENTIFICATION MARK ON PRODUCT:
7. HALOGEN FREE PRODUCT IDENTIFICATION LABEL ON PACKAGING:
8. FOR REFLOW SOLDERING LEAD-FREE PROCESS.
9. SOLDER HEAT RESISTANCE REFLOW SOLDERING 260°C 10SECS.
10. PACKAGING: TAPE & REEL.

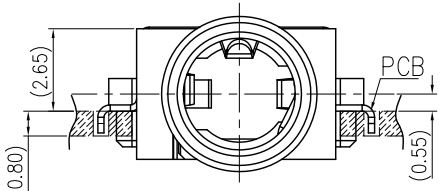


RECOMMENDED PCB LAYOUT
TOP VIEW (TOLERANCE: ±0.05)

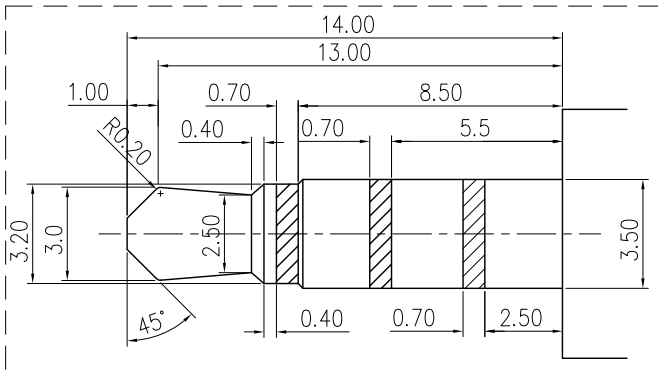


3.5ø 4POLE PLUG (TOLERANCE: ±0.05)

| NO | DESCRIPTION | QTY | MATERIAL | PLATING & COLOR |
|---|---|---|---|---|
| G | COVER | 1 | SUS | |
| F | EARTH | 1 | COPPER ALLOY 0.2t | GOLD FLASH |
| E | RING SPRING B | 1 | COPPER ALLOY 0.2t | GOLD FLASH |
| D | RING SPRING A | 1 | COPPER ALLOY 0.2t | GOLD FLASH |
| C | TIP SPRING | 1 | COPPER ALLOY 0.2t | Gold Flash on contact area and Solder tail, all over Nickel Plated |
| B | GROUND | 1 | COPPER ALLOY 0.2t | GOLD FLASH |
| A | BODY | 1 | THERMOPLASTIC HIGH TEMP | BLACK COLOR |

UNLESS OTHERWISE SPECIFED TOLERANCES

DECIMALS: X : ±0.5, X.X : ±0.3, X.XX : ±0.2

ANGLES: X : ±2°, X.X : ±1°

Singatron Enterprise Co., Ltd.
信音企業股份有限公司

| | | | |
|---|---|---|---|
| TITLE | Ø3.5 Phone Jack | | |
| DWN | DAOWEN 2012.09.12 | PART NO. 2SJ2271-108112F | |
| CHKD | ZJZ 2012.09.12 | SCALE 1:1 | UNIT: mm |
| APVD | LIAO 2012.09.13 | SIZE: A3 | SHEET: 10F1 REV: B |

CUSTOMER COPY

文件編號:RD-06-043-A