REV.	ECN NO OR DESCRIPTION	REVISED	DATE
A	PRODUCT RELEASE	Sticky	2011.07.21
B	ECN:C110387 Modify plating	LONGJIANG	2012.01.03

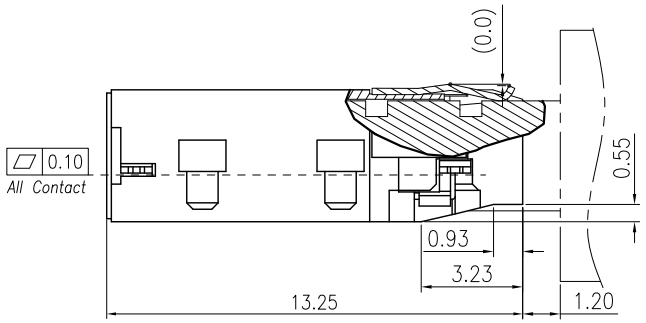

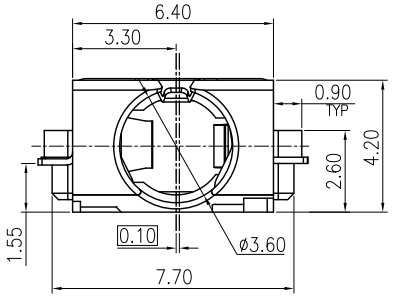

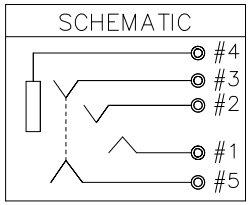

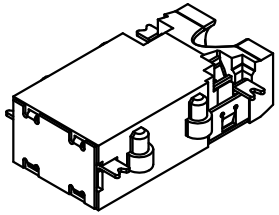

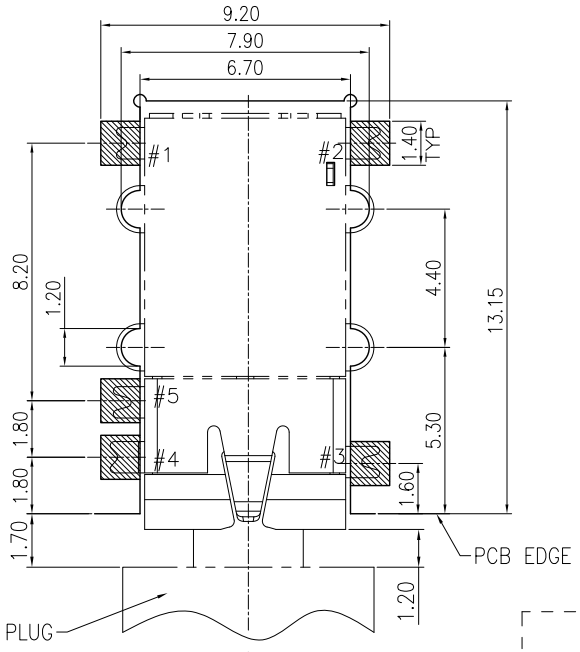

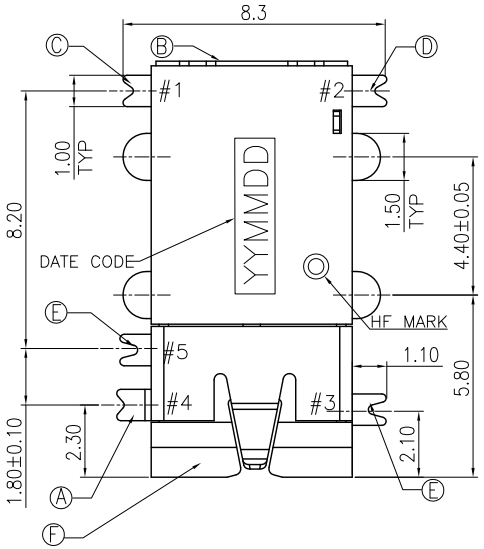

SPECIFICATIONS:

1. ELECTRICAL CHARACTERISTICS:
   1-1. RATING: 12V 1A
   1-2. CONTACT RESISTANCE: 30m MAX.(INITIAL)
   1-3. DIELECTRIC WITHSTANDING VOLTAGE: 500V AC FOR ONE MINUTE.
   1-4. INSULATION RESISTANCE: 100M MIN. MEASURED BY 500 VDC
2. MECHANICAL CHARACTERISTICS:
   2-1. INSERTION FORCE : 0.3~3.0 KGF
   2-2. WITHDRAWAL FORCE : 0.3~3.0 KGF
3. LIFE TEST: 10,000 CYCLES MIN.
4. OTHER GENERAL SPEC. TO REFER "2SJ2271 SERIES SPEC".
5. TO CONFORM TO THE SINGATRON HSF SPEC.
6. HALOGEN FREE PRODUCT IDENTIFICATION MARK ON PRODUCT:
7. HALOGEN FREE PRODUCT IDENTIFICATION LABEL ON PACKAGING:
8. FOR REFLOW SOLDERING LEAD-FREE PROCESS.
9. PACKAGING:TAPE & REEL.

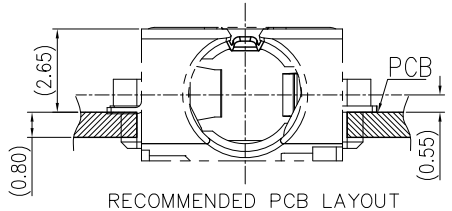

RECOMMENDED PCB LAYOUT
TOP VIEW (TOLERANCE: ±0.05)

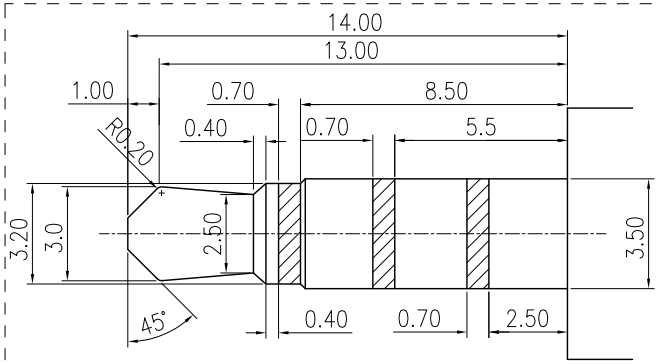

3.5ø 4POLE PLUG (TOLERANCE:±0.05)

NO	DESCRIPTION	QTY	MATERIAL	PLATING & COLOR
F	BODY	1	THERMOPLASTIC HIGH TEMP	BLACK
E	RING SPRING B	2	COPPER ALLOY 0.2t	GOLD FLASH
D	RING SPRING A	1	COPPER ALLOY 0.2t	GOLD FLASH
C	TIP SPRING	1	COPPER ALLOY 0.2t	Gold flash on contact area And solder tail,all over Nickel plated
B	COVER	1	SUS	
A	EARTH	1	COPPER ALLOY 0.2t	GOLD FLASH

UNLESS OTHERWISE SPECIFED TOLERANCES

DECIMALS:
X :±0.5
X.X :±0.3
X.XX :±0.2

ANGLES:
X :±2°
X.X :±1°

Singatron Enterprise Co., Ltd.
信音企業股份有限公司

TITLE	3.5ø PHONE JACK			
DWN	LONGJIANG2012.1.9	PART NO. 2SJ2271-508211F(FOR ASUS)		
CHKD	ZJZ 2012.01.09	SCALE 6:1	UNIT: mm	
APVD	LIAO 2012.01.09	SIZE: A3	SHEET: 10F1	REV: B

CUSTOMER COPY

文件編號 RD-06-043-A