REV.	ECN NO OR DESCRIPTION	REVISED	DATE
A	PRODUCE RELEASE	JIANGUO	2011.02.28
B	ECN:C110063Modify Drawing	LONGJIANG	2011.3.31
C	ECN:C120193 UPDATE DRAWING	DAOWEN	2012.09.05

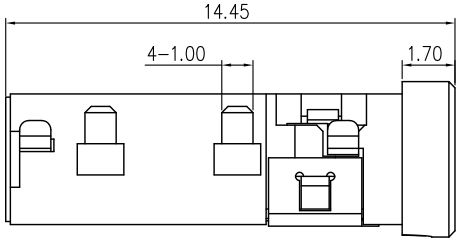

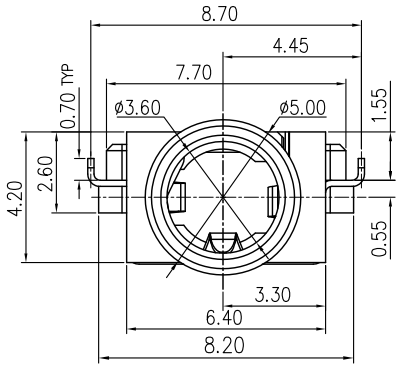

SCHEMATIC

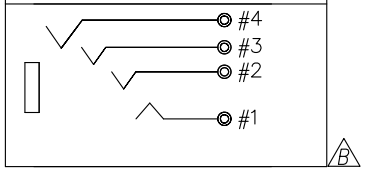

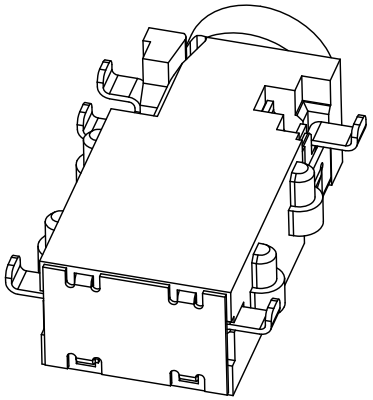

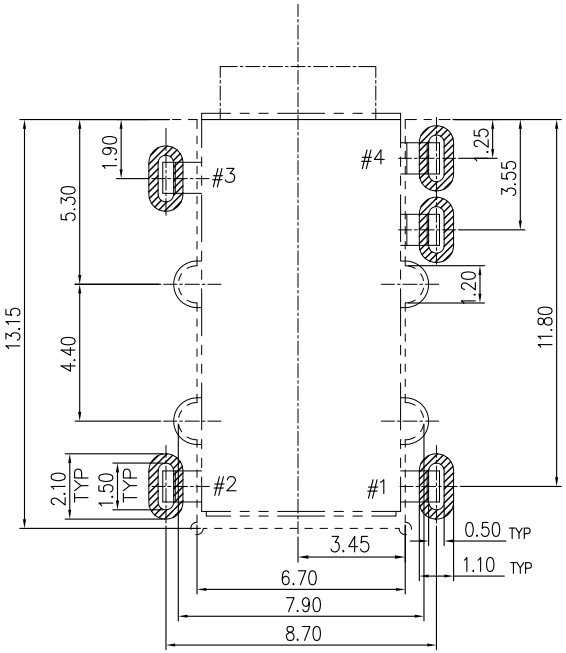

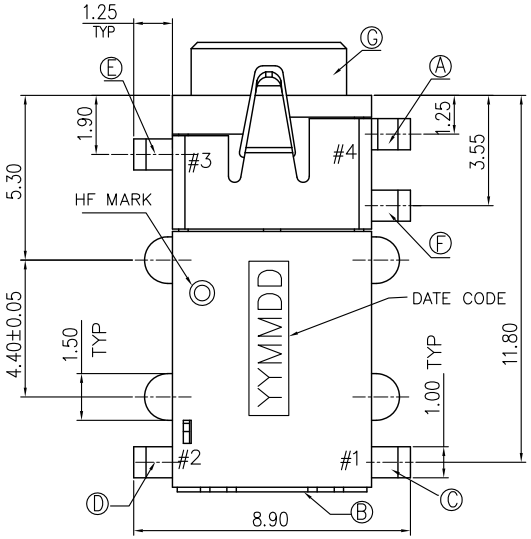

SPECIFICATIONS:

1. ELECTRICAL CHARACTERISTICS:
   1-1. RATING: 12V 1A
   1-2. CONTACT RESISTANCE: 30mΩMAX(BEFORE).
   1-3. DIELECTRIC VOLTAGE WITHSTAND: 500V AC FOR ONE MINUTE
   1-4. INSULATION RESISTANCE: 100MΩMIN. MEASURED BY 500 VDC
2. MECHANICAL CHARACTERISTICS:
   2-1. INSERTED FORCE : 3.0 KGF MAX.
   2-2. WITHDRAWAL FORCE : 0.3~3.0 KGF
3. LIFE TEST: 5,000 CYCLES MIN.
4. TO CONFORM TO THE SINGATRON HSF SPECIFICATION.
6. HALOGEN FREE PRODUCT IDENTIFICATION MARK:
7. HALOGEN FREE PRODUCT IDENTIFICATION LABEL ON PACKAGING:
7. FOR REFLOW SOLDERING LEAD-FREE PROCESS.
8. PACKAGING IN TAPE & REEL.

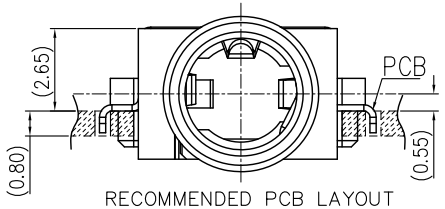

RECOMMENDED PCB LAYOUT
TOP VIEW (TOLERANCE: ±0.05)

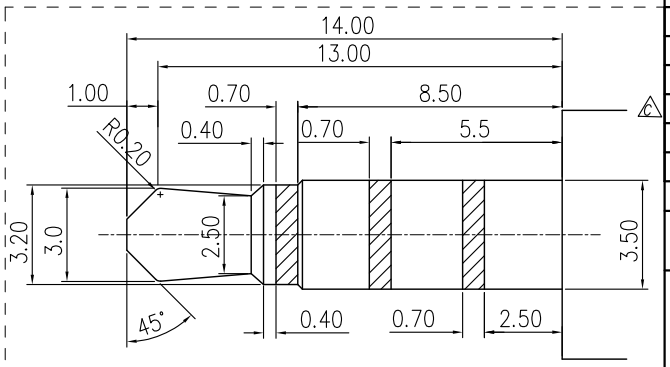

3.5ø 4POLE PLUG (TOLERANCE:±0.05)

NO	DESCRIPTION	QTY	MATERIAL	PLATING & COLOR
G	BODY	1	THERMOPLASTIC HIGH TEMP	BLACK
F	GROUNG	1	COPPER ALLOY 0.2t	GOLD FLASH
E	RING SPRING B	1	COPPER ALLOY 0.2t	GOLD FLASH
D	RING SPRING A	1	COPPER ALLOY 0.2t	GOLD FLASH
C	TIP SPRING	1	COPPER ALLOY 0.2t	Gold Flash on contact area and Solder tail,all over Nickel Plated
B	COVER	1	SUS	
A	EARTH	1	COPPER ALLOY 0.2t	GOLD FLASH

UNLESS OTHERWISE SPECIFED TOLERANCES

DECIMALS: X :±0.5, X.X :±0.3, X.XX :±0.2

ANGLES: X :±2°, X.X :±1°

Singatron Enterprise Co., Ltd.
信音企業股份有限公司

TITLE	3.5ø PHONE JACK			
DWN	DAOWEN 2012.09.12	PART NO. 2SJ2271-708111F		
CHKD	ZJZ 2012.09.12	SCALE 6:1	UNIT: mm	
APVD	LIAO 2012.09.13	SIZE: A3	SHEET: 1OF1	REV: C

CUSTOMER COPY

文件編號 RD-06-043-A