REV.	ECN NO OR DESCRIPTION	REVISED	DATE
A	PDR NO:T101008-5A	BILLY	2011.01.18
B	ECN NO:C110149-17Moidify Plating specification	BILLY	2011.06.23

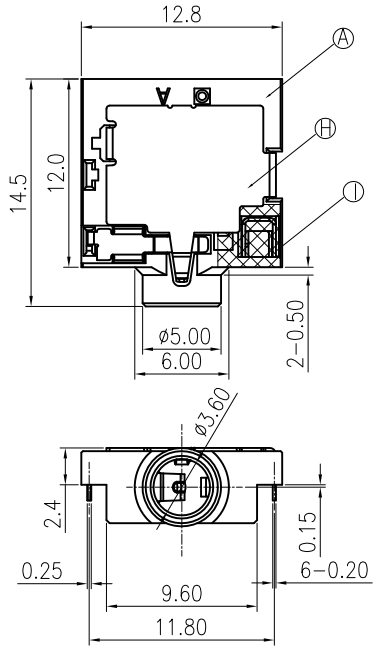

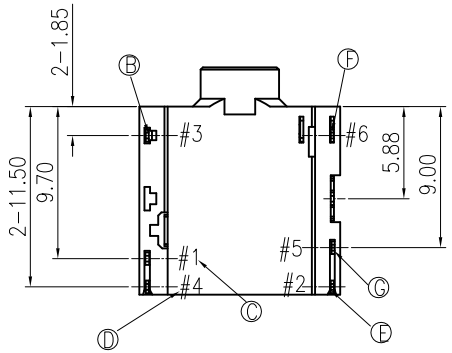

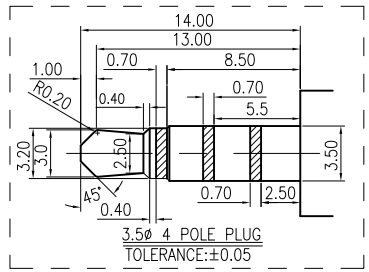

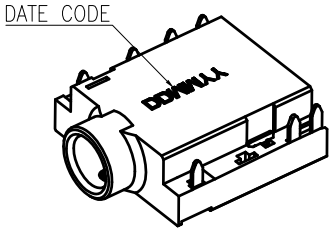

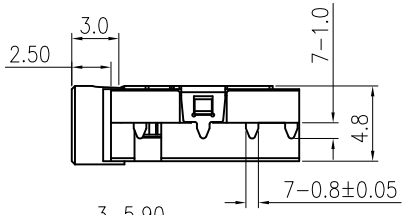

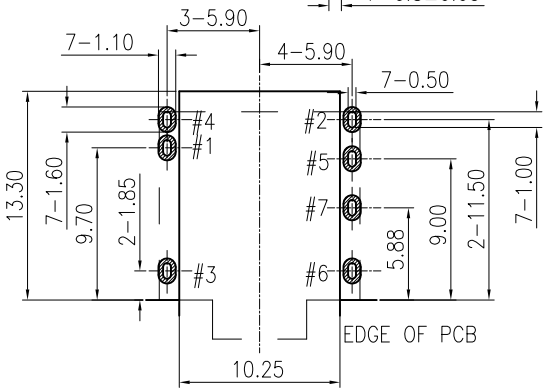

RECOMMENDED P.C.B. LAYOUT

TOP VIEW (TOLRANCE: ±0.05)

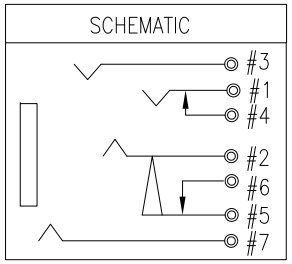

SPECIFICATIONS:

1. ELECTRICAL CHARACTERISTICS:
   - 1-1. RATING: 36V, 1A DC.
   - 1-2. CONTACT RESISTANCE: 50 MILLIOHMS Max.
   - 1-3. INSULATION RESISTANCE: 100 MEGAOHMS Min. BY 500V DC AFTER 1 MINUTE.
   - 1-4. DIELECTRIC WITHSTANDING VOLTAGE: 500V RMS AFTER 1 MINUTE.
2. MECHANICAL CHARACTERISTICS:
   - 2-1. INSERTION FORCE : 0.4~3.0 KGF
   - 2-2. WITHDRAWAL FORCE : 0.3~2.0 KGF
3. LIFE TEST: 5,000 CYCLES MIN.
4. OTHER GENERAL SPEC. TO REFER "2SJ2284 SERIES SPEC".
5. TO CONFORM TO SINGATRON HAZARDOUS SUBSTANCE FREE SPEC.
6. HALOGEN FREE PRODUCT IDENTIFICATION MARK ON PRODUCT: ◎
7. HALOGEN FREE PRODUCT IDENTIFICATION LABEL ON PACKAGING:
8. FOR REFLOW SOLDERING LEAD-FREE PROCESS.
9. PACKAGING:TAPE&REEL.

NO	DESCRIPTION	QTY	MATERIAL	PLATING & COLOR
G	TRANSFER TERMINAL	1	COPPER ALLOY 0.20T	⚠ Gold Flash on contact area and Solder tail,all over Nickel Plated
F	BRAKE TERMINAL	1	COPPER ALLOY 0.20T	GOLD FLASH
E	RING	1	COPPER ALLOY 0.20T	⚠ Gold Flash on contact area and Solder tail,all over Nickel Plated
D	SHUNT	1	COPPER ALLOY 0.20T	GOLD FLASH
C	TIP	1	COPPER ALLOY 0.25T	⚠ Gold Flash on contact area and Solder tail,all over Nickel Plated
B	EARTH	1	COPPER ALLOY 0.20T	GOLD FLASH
A	BODY	1	HIGH TEMP.THERM OPLASTIC 94V-0	BLACK COLOR

UNLESS OTHERWISE SPECIFED TOLERANCES

DECIMALS: X :±0.5, X.X :±0.3, X.XX :±0.2

ANGLES: X :±2°, X.X :±1°

Singatron Enterprise Co., Ltd.
信音企業股份有限公司

TITLE	3.5ø PHONE JACK		
DWN	BILLY 2011.6.25	PART NO. 2SJ2284-103393F	
CHKD	ZJZ 2011.6.25	SCALE 3:1	UNIT: mm
APVD	LAIO 2011.6.25	SIZE: A3	SHEET: 1OF1	REV: B

CUSTOMER COPY

文件編號: RD-06-043-A