REV.	ECN NO OR DESCRIPTION	REVISED	DATE
A	PRODUCT RELEASE	ZLS	2012.12.18
B	ECN NO:C130011 MODIFY MYLAR AND BODY	BILLY	2013.05.23

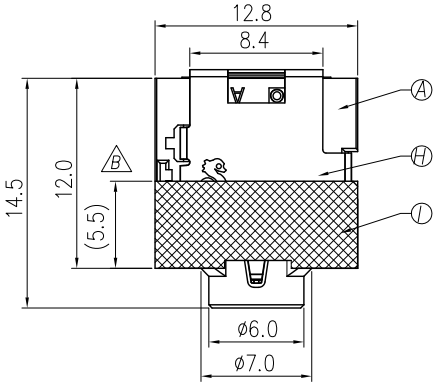

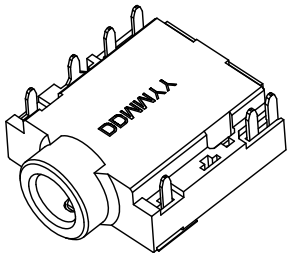

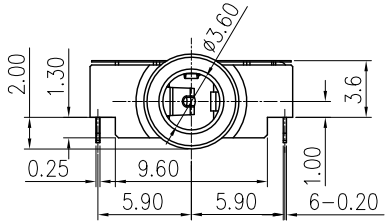

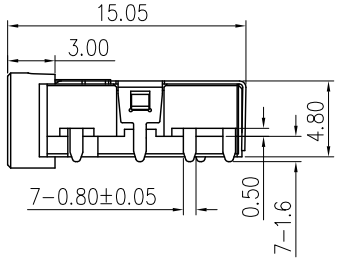

SPECIFICATIONS:

1. ELECTRICAL CHARACTERISTICS:
   1-1. RATING: 12V, 1A.
   1-2. CONTACT RESISTANCE:
   30 MILLIOHMS Max. FOR INITIAL,
   50 MILLIOHMS Max. AFTER 5000 CYCLES.
   1-3. INSULATION RESISTANCE: 100 MEGAOHMS Min. BY 500V DC AFTER 1 MINUTE.
   1-4. DIELECTRIC WITHSTANDING VOLTAGE: 500V RMS AFTER 1 MINUTE.
2. MECHANICAL CHARACTERISTICS:
   2-1. INSERTION FORCE : 0.4~3.0 KGF
   2-2. WITHDRAWAL FORCE : 0.3~2.0 KGF
3. LIFE TEST: 5,000 CYCLES .
4. OTHER GENERAL SPEC. TO REFER "2SJ2285 SERIES SPEC".
5. TO CONFORM TO SINGATRON HAZARDOUS SUBSTANCE FREE SPEC.
6. HALOGEN FREE PRODUCT IDENTIFICATION MARK ON PRODUCT: ◎
7. HALOGEN FREE PRODUCT IDENTIFICATION LABEL ON PACKAGING:
8. FOR REFLOW SOLDERING LEAD-FREE PROCESS.
9. PACKAGING: TAPE&REEL.

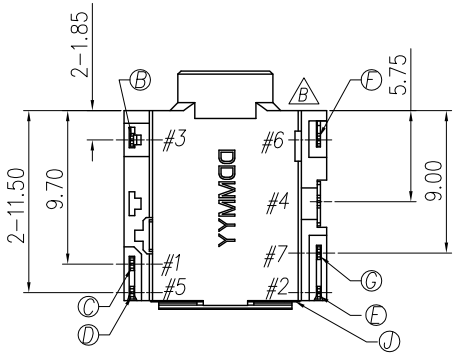

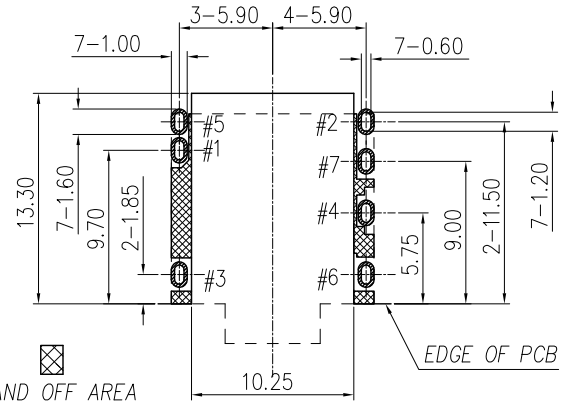

STAND OFF AREA

RECOMMENDED P.C.B. LAYOUT T=1.00

TOP VIEW (TOLRANCE: ±0.05)

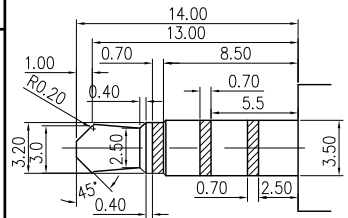

3.5ø 4 POLE PLUG

TOLERANCE: ±0.05

SCHEMATIC

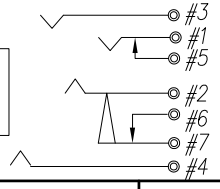

NO	DESCRIPTION	QTY	MATERIAL	PLATING & COLOR
J	MYLAR	1	MYLAR 0.075T	
I	MYLAR	1	MYLAR 0.075T	
H	SHELL	1	COPPER ALLOY 0.20T	NI PLATING
G	TRANSFER TERMINAL	1	COPPER ALLOY 0.20T	Gold Flash on contact area and Solder tail all over Nickel Plating
F	BREAK TERMINAL	1	COPPER ALLOY 0.20T	GOLD FLASH
E	RING	1	COPPER ALLOY 0.20T	Gold Flash on contact area and Solder tail all over Nickel Plating
D	SHUNT	1	COPPER ALLOY 0.20T	GOLD FLASH
C	TIP	1	COPPER ALLOY 0.25T	Gold Flash on contact area and Solder tail all over Nickel Plating
B	EARTH	1	COPPER ALLOY 0.20T	GOLD FLASH
A	BODY	1	HIGH TEMP.THERMOPLASTIC UL 94V-0	BLACK COLOR

UNLESS OTHERWISE SPECIFED TOLERANCES

DECIMALS: X :±0.5, X.X :±0.3, X.XX :±0.2

ANGLES: X :±2°, X.X :±1°

Singatron Enterprise Co., Ltd.
信音企業股份有限公司

TITLE	3.5ø PHONE JACK		
DWN	BILLY 13/5/10	PART NO. 2SJ2284-103692F	
CHKD	ZJZ 13/5/10	SCALE 3:1	UNIT: mm
APVD	13/5/10	SIZE: A3	SHEET:1 OF 1	REV: B

CUSTOMER COPY

文件編號 RD-08-043-4