REV.	ECN NO OR DESCRIPTION	REVISED	DATE
B	DESIGN CHANGE ECN No.:C090001-3/4.	CHARLIE	2009.02.03
C	1.DEPEND ON ECR(C090030)REQUIRE,CHANG THE FOOT HEAD FROM 2.0mm to 1.2mm; 2.ECN NO.C090030. △1	JUNHUA	2009.05.19
D	ECN NO:C110149-17Moidify Plating specification	BILLY	2011.06.23

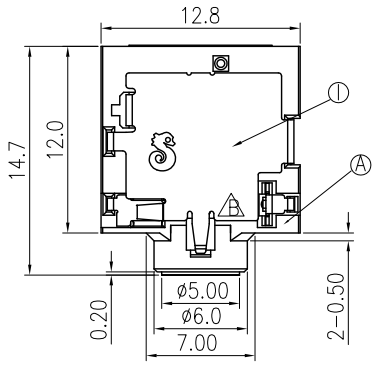

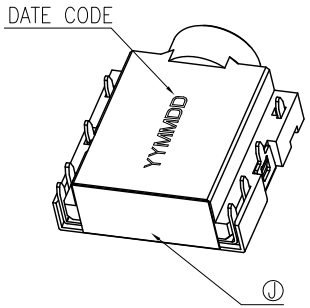

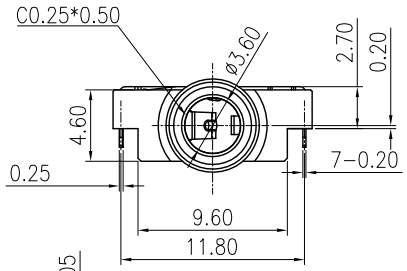

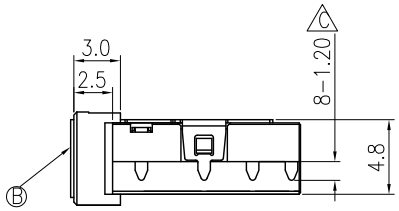

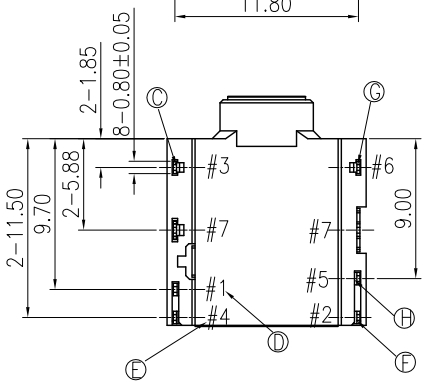

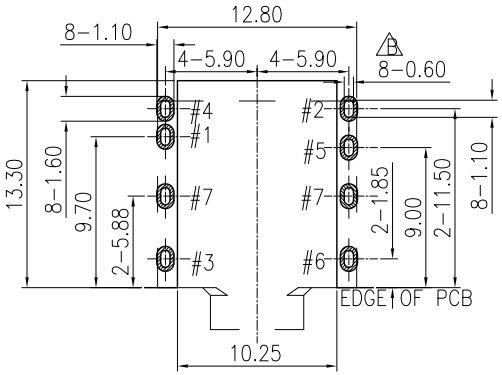

RECOMMENDED P.C.B. LAYOUT T=1.20

TOP VIEW (TOLRANCE: ±0.05)

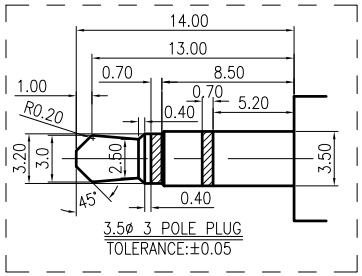

3.5ø 3 POLE PLUG

TOLERANCE:±0.05

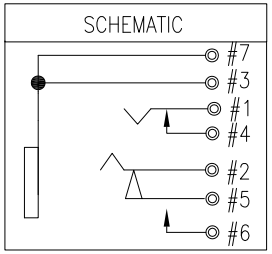

SPECIFICATIONS:

1. ELECTRICAL CHARACTERISTICS:
   - 1-1. RATING: 36V AC, 1A DC.
   - 1-2. CONTACT RESISTANCE: 50mΩ MAX.
   - 1-3. DIELECTRIC WITHSTANDING VOLTAGE: 500V AC FOR ONE MINUTE.
   - 1-4. INSULATION RESISTANCE: 100MΩ MIN. MEASURED BY 500 VDC
2. MECHANICAL CHARACTERISTICS:
   - 2-1. INSERTION FORCE : 0.4~3.0 KGF
   - 2-2. WITHDRAWAL FORCE : 0.3~2.0 KGF
3. LIFE TEST: 5,000 CYCLES MIN.
4. OTHER GENERAL SPEC. TO REFER "2SJ2285 SERIES SPEC".
5. TO CONFORM TO THE SINGATRON HAZARDOUS SUBSTANCE FREE SPEC.
6. HALOGEN PRODUCT IDENTIFICATION MARK ON JACK: ◎
7. HALOGEN PRODUCT IDENTIFICATION LABEL ON PACKAGING: HF JP PASS HAZARDOUS SUBSTANCE FREE
8. FOR REFLOW SOLDERING LEAD-FREE PROCESS.
9. PACKAGING:TAPE&REEL.
10. P/N INFORMATION:

    2SJ2285-0011X1

    BODY MATERIAL & BODY COLOR
    1:LCP E130i PINK 701C
    3:LCP E130i LIME 577C

NO	DESCRIPTION	QTY	MATERIAL	PLATING & COLOR
J	MYLAR	1	T=0.075	
I	SHIELD	1	COPPER ALLOY 0.20T	NI PLATING
H	TRANSFER TERMINAL	1	COPPER ALLOY 0.20T	△1 Gold Flash on contact area and Solder tail,all over Nickel Plated
G	MAKE TERMINAL	1	COPPER ALLOY 0.20T	GOLD FLASH
F	RING	1	COPPER ALLOY 0.20T	△1 Gold Flash on contact area and Solder tail,all over Nickel Plated
E	SHUNT	1	COPPER ALLOY 0.20T	GOLD FLASH
D	TIP	1	COPPER ALLOY 0.25T	△1 Gold Flash on contact area and Solder tail,all over Nickel Plated
C	EARTH	1	COPPER ALLOY 0.20T	GOLD FLASH
B	METAL	1	COPPER ALLOY 0.20T	NI PLATING
A	BODY	1	HIGH TEMP.THERMO PLASTIC 94V-0	SEE NOTE 10

UNLESS OTHERWISE SPECIFED TOLERANCES

DECIMALS: X :±0.5, X.X :±0.3, X.XX :±0.2

ANGLES: X :±2°, X.X :±1°

Singatron Enterprise Co., Ltd.
信音企業股份有限公司

TITLE	3.5ø PHONE JACK			
DWN	BILLY 2011.6.25	PART NO. 2SJ2285-0011X1		
CHKD	ZJZ 2011.6.25	SCALE 3:1	UNIT: mm	
APVD	LIAO 2011.6.25	SIZE: A3	SHEET: 1OF1	REV: D

CUSTOMER COPY

文件編號 RD-06-043-A