REV.	ECN NO OR DESCRIPTION	REVISED	DATE
B	ADD MYLAR	Steven-hu	2010.04.12
C	ECN NO:C110149-17Moidify Plating specification	BILLY	2011.06.23
D	ECN NO.:C140074 MODIFY LAYOUT	ZLS	2014.8.1

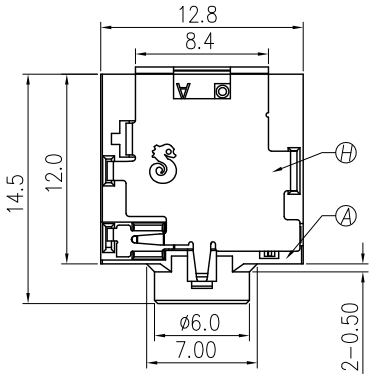

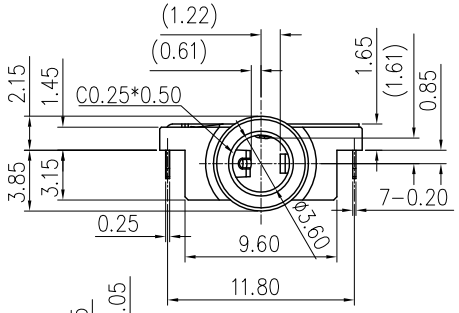

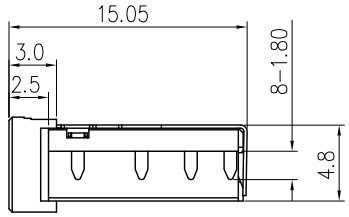

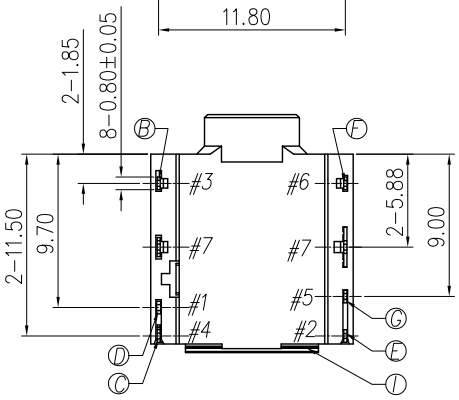

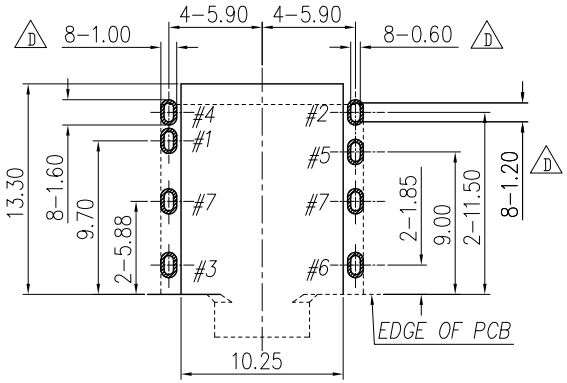

RECOMMENDED P.C.B. LAYOUT T=1.20

TOP VIEW (TOLRANCE: ±0.05)

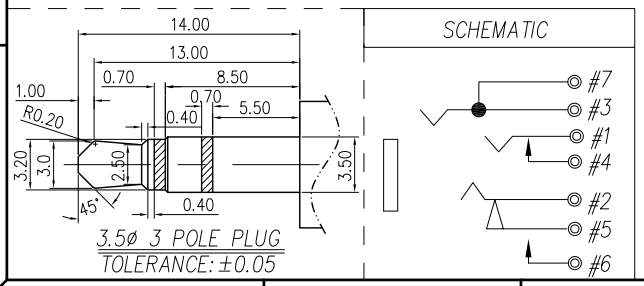

3.5ø 3 POLE PLUG

TOLERANCE: ±0.05

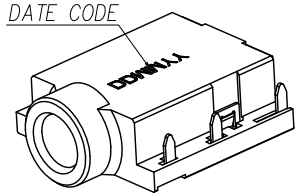

SPECIFICATIONS:

1. ELECTRICAL CHARACTERISTICS:
   - 1-1. RATING: 36V AC, 1A DC.
   - 1-2. CONTACT RESISTANCE: 50mΩ MAX.
   - 1-3. DIELECTRIC WITHSTANDING VOLTAGE: 500V AC FOR ONE MINUTE.
   - 1-4. INSULATION RESISTANCE: 100MΩ MIN. MEASURED BY 500 VDC
2. MECHANICAL CHARACTERISTICS:
   - 2-1. INSERTION FORCE : 0.4~3.0 KGF
   - 2-2. WITHDRAWAL FORCE : 0.3~2.0 KGF
3. LIFE TEST: 5,000 CYCLES MIN.
4. OTHER GENERAL SPEC. TO REFER "2SJ2285 SERIES SPEC".
5. TO CONFORM TO THE SINGATRON HAZARDOUS SUBSTANCE FREE SPEC.
6. HALOGEN FREE PRODUCT IDENTIFICATION MARK ON JACK:◎
7. HALOGEN FREE PRODUCT IDENTIFICATION LABEL ON PACKAGING:
8. FOR REFLOW SOLDERING LEAD-FREE PROCESS.
9. PACKAGING: TAPE&REEL.

NO	DESCRIPTION	QTY	MATERIAL	PLATING & COLOR
I	MYLAR	1	MYLAR 0.075T	
H	SHIELD	1	COPPER ALLOY 0.20T	NI PLATING
G	TRANSFER TERMINAL	1	COPPER ALLOY 0.20T	△ Gold Flash on contact area and Solder tail,all over Nickel Plated
F	MAKE TERMINAL	1	COPPER ALLOY 0.20T	GOLD FLASH
E	RING	1	COPPER ALLOY 0.20T	△ Gold Flash on contact area and Solder tail,all over Nickel Plated
D	TIP	1	COPPER ALLOY 0.25T	
C	SHUNT	1	COPPER ALLOY 0.20T	GOLD FLASH
B	EARTH	1	COPPER ALLOY 0.20T	GOLD FLASH
A	BODY	1	HIGH TEMP.THERMOPLASTIC UL 94V-0	BLACK COLOR

UNLESS OTHERWISE SPECIFED TOLERANCES

DECIMALS: X :±0.5, X.X :±0.3, X.XX :±0.2

ANGLES: X :±2°, X.X :±1°

Singatron Enterprise Co., Ltd.
信音企業股份有限公司

TITLE	3.5ø PHONE JACK		
DWN	ZLS 14/8/19	PART NO. 2SJ2285-002611	
CHKD	BILLY 14/8/19	SCALE 3:1	UNIT: mm
APVD	ZJZ 14/8/19	SIZE: A3	SHEET: 1OF1	REV: D

CUSTOMER COPY

文件編號 RD-06-043-A