REV.	ECN NO OR DESCRIPTION	REVISED	DATE
A	PRODUCT RELEASE	Sticky	2011.11.09
B	ECN-C140231: UPDATE DRAWING	REX	2014.09.22

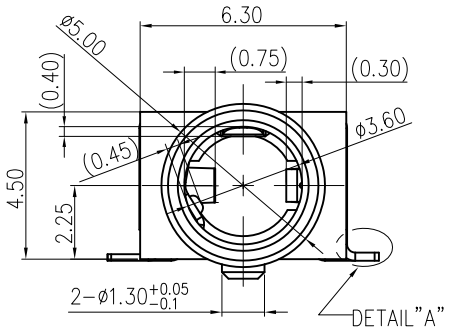

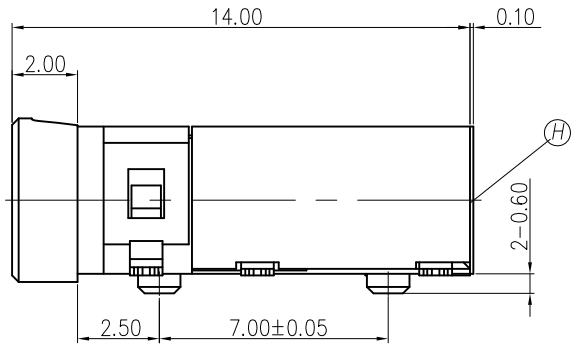

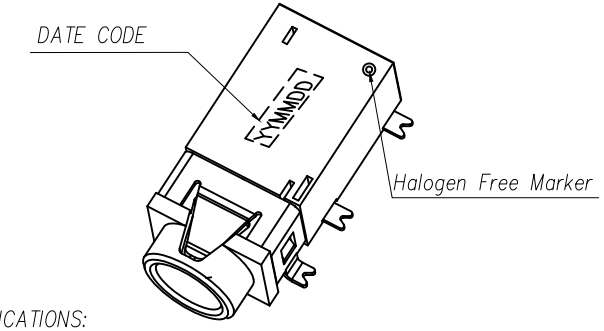

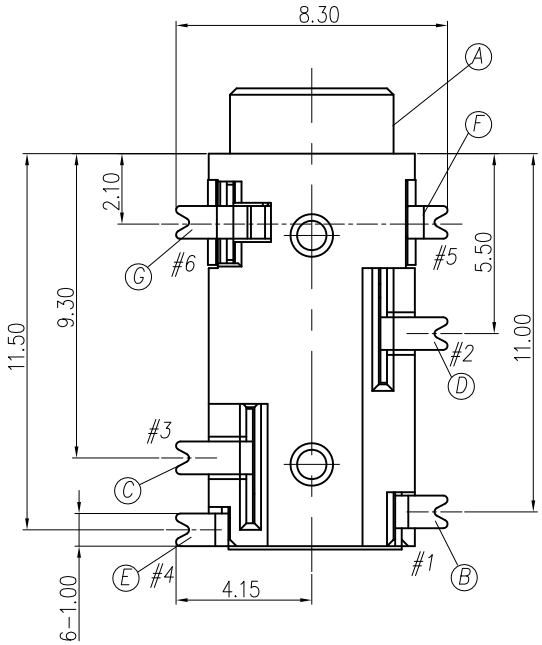

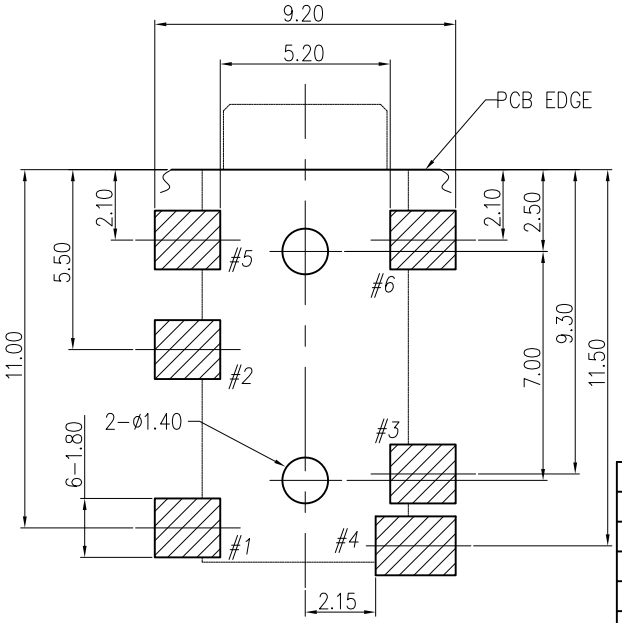

RECOMMENDED PCB LAYOUT
TOP VIEW (TOLERANCE: ±0.05)

SPECIFICATIONS:

1. ELECTRICAL CHARACTERISTICS:
   1-1. RATING: 12V 1A
   1-2. CONTACT RESISTANCE: 30mΩ MAX.(INITIAL)
   1-3. DIELECTRIC WITHSTANDING VOLTAGE: 500V AC FOR ONE MINUTE.
   1-4. INSULATION RESISTANCE: 100MΩ MIN. MEASURED BY 500 VDC
2. MECHANICAL CHARACTERISTICS:
   2-1. INSERTION FORCE : 0.3~3.0 KGF
   2-2. WITHDRAWAL FORCE : 0.3~3.0 KGF
3. LIFE TEST: 5,000 CYCLES MIN.
4. OTHER GENERAL SPEC. TO REFER "2SJ2296 SERIES SPEC".
5. TO CONFORM TO SINGATRON HAZARDOUS SUBSTANCE FREE SPEC.
6. HF PRODUCT IDENTIFICATION MARK ON JACK:
7. HF PRODUCT IDENTIFICATION LABEL ON PACKING:
8. FOR REFLOW SOLDERING LEAD-FREE PROCESS.
9. PACKAGING: TAPE & REEL.

NO	DESCRIPTION	QTY	MATERIAL	PLATING & COLOR
H	MYLAR	1	MYLAR 0.075T	
G	RING-B	1	COPPER ALLOY 0.2t	Gold Flash On Contact Area & Solder tail, All over Nickel Plated
F	EARTH	1	COPPER ALLOY 0.25t	
E	TIP SPRING	1	COPPER ALLOY 0.2t	
D	SHUNT-B	1	COPPER ALLOY 0.2t	
C	SHUNT-A	1	COPPER ALLOY 0.2t	
B	RING-A	1	COPPER ALLOY 0.2t	
A	BODY	1	HIGH TEMP. THERMOPLASTIC UL94-V0	BLACK

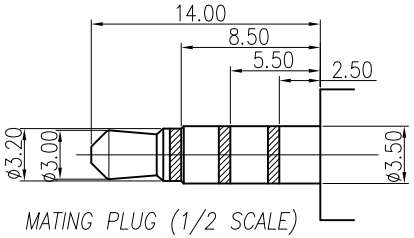

MATING PLUG (1/2 SCALE)
ø3.5 4-POLE STANDARD PLUG(TOL:±0.05)

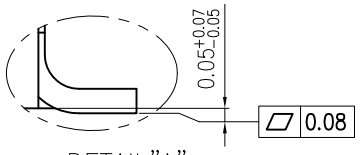

DETAIL"A"

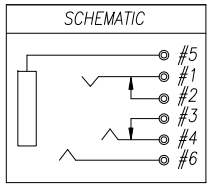

UNLESS OTHERWISE SPECIFED TOLERANCES

DECIMALS: X : ±0.5, X.X : ±0.3, X.XX : ±0.2
ANGLES: X : ±2°, X.X : ±1°

Singatron Enterprise Co., Ltd.
信音企業股份有限公司

TITLE	ø3.5 PHONE JACK			
DWN	REX 14/9/25	PART NO. 2SJ2296-000141F		
CHKD	WZJ 14/9/25	SCALE 6:1	UNIT: mm	
APVD	ZJZ 14/9/25	SIZE: A3	SHEET: 10F1	REV: B

CUSTOMER COPY

文件編號 RD-06-043-A