REV.	ECN NO OR DESCRIPTION	REVISED	DATE
A	PRODUCT RELEASE	Sticky-hu	2012.07.31

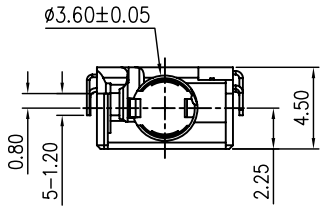

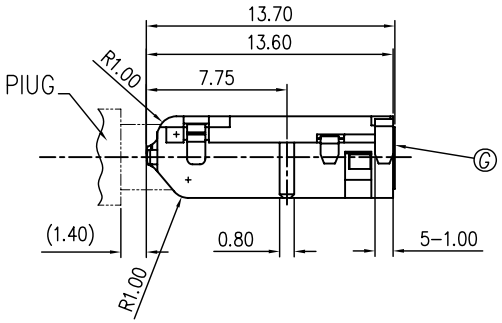

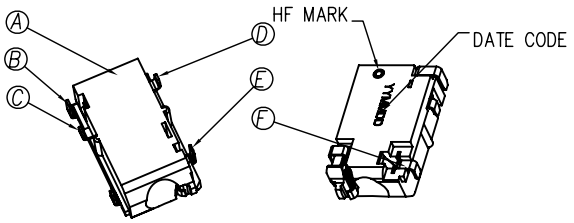

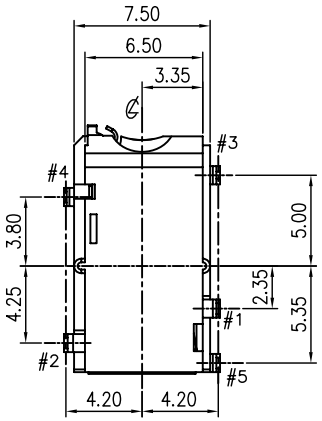

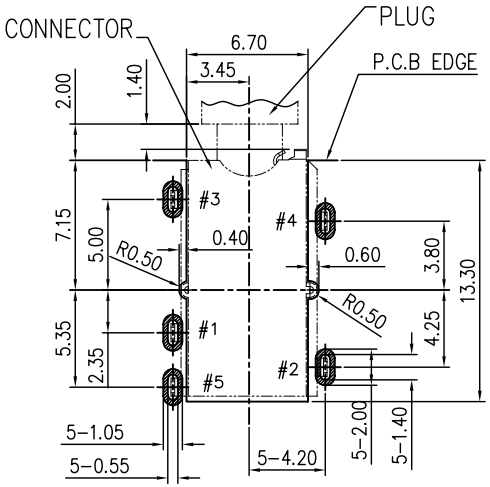

RECOMMENDED P.C.B. LAYOUT
TOP VIEW (TOLERANCE: ±0.05)

SPECIFICATIONS:

1. ELECTRICAL CHARACTERISTICS:
   1-1. RATING: 12V 1A
   1-2. CONTACT RESISTANCE: 30mΩMAX(INITIAL).
   1-3. DIELECTRIC VOLTAGE WITHSTAND: 500V AC FOR ONE MINUTE
   1-4. INSULATION RESISTANCE: 100MΩMIN. MEASURED BY 500 VDC
2. MECHANICAL CHARACTERISTICS:
   2-1. INSERTED FORCE : 3.0 KGF MAX.
   2-2. WITHDRAWAL FORCE : 0.3~3.0 KGF
3. LIFE TEST: 5,000 CYCLES MIN.
4. TO CONFORM TO THE SINGATRON HSF SPECIFICATION.
5. FOR REFLOW SOLDERING LEAD-FREE PROCESS.
6. HALOGEN FREE PRODUCT IDENTIFICATION MARK:
7. HALOGEN FREE PRODUCT IDENTIFICATION LABEL ON PACKAGING:
8. PACKAGING: TAPE & REEL.

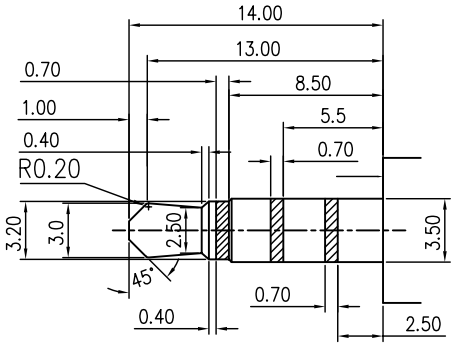

3.5ø 4POLE PLUG(TOLERANCE: ±0.05)

SCHEMATIC

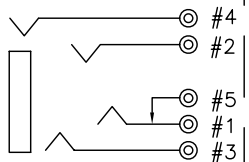

NO	DESCRIPTION	QTY	MATERIAL	PLATING & COLOR
G	MYLAR	1	MYLAR 0.1T	BLACK
F	RING-B	1	COPPER ALLOY 0.2T	GOLD FLASH ON CONTACT AREA AND SOLDER TAIL, ALL OVER NICKEL PLATED
E	EARTH	1	COPPER ALLOY 0.15T	
D	RING-A	1	COPPER ALLOY 0.2T	
C	TIP	1	COPPER ALLOY 0.2T	
B	SHUNT	1	COPPER ALLOY 0.2T	
A	BODY	1	HI-TEMP THERMOPLASTIC UL94V-0	BLACK

UNLESS OTHERWISE SPECIFED TOLERANCES

Singatron Enterprise Co., Ltd.
信音企業股份有限公司

DECIMALS: X :±0.5, X.X :±0.3, X.XX :±0.2
ANGLES: X :±2°, X.X :±1°

TITLE	ø3.5 PHONE JACK		
DWN	STICKY 2012.08.01	PART NO. 2SJ2321-016111F	
CHKD	WINKAN 2012.08.03	SCALE 3:1	UNIT: mm
APVD	LIAO 2012.08.03	SIZE: A3	SHEET: 1OF1 REV: A

CUSTOMER COPY

文件編號RD-06-043-A