REV.	ECN NO OR DESCRIPTION	REVISED	DATE
A	PRODUCT RELEASE	BILLY	2011.11.03
B	ECN NO:C120099 ADD STAND OFF	ZLS	2012.04.23

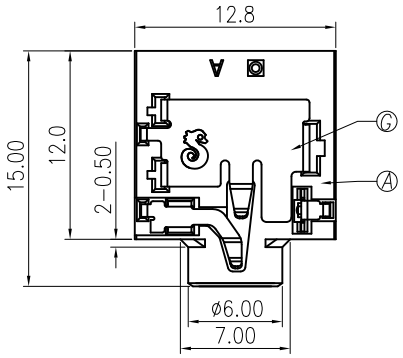

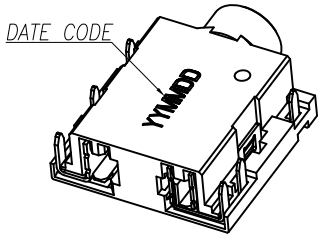

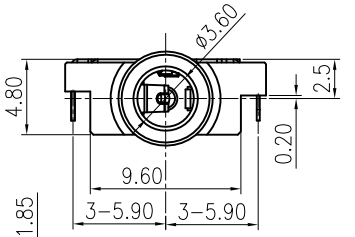

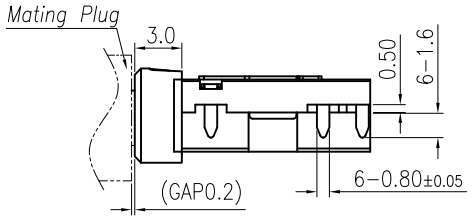

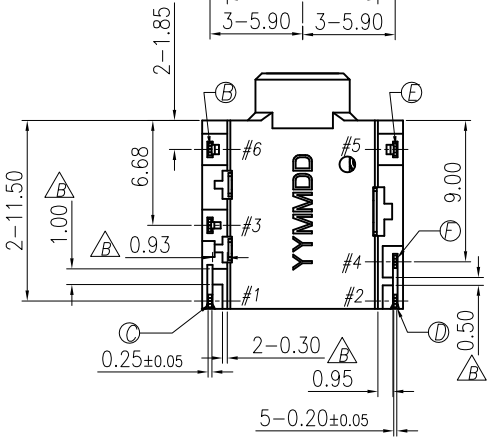

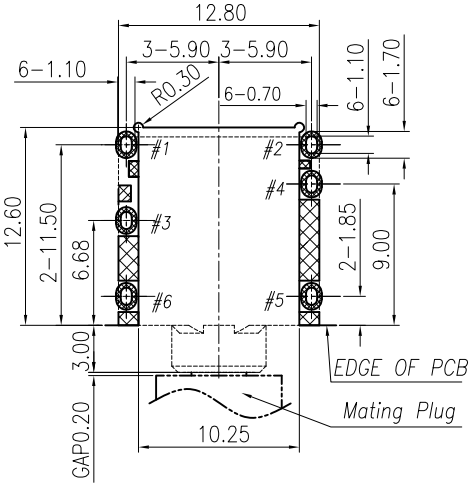

RECOMMENDED P.C.B. LAYOUT T=1.20

TOP VIEW (TOLRANCE: ±0.05)

SPECIFICATIONS:

1. ELECTRICAL CHARACTERISTICS:
   - 1-1. RATING:1AMPERE MAXIMUM, 150V, MAXIMUM.
   - 1-2. CONTACT RESISTANCE: 50m ΩMAX.
   - 1-3. DIELECTRIC WITHSTANDING VOLTAGE: 500V AC FOR ONE MINUTE.
   - 1-4. INSULATION RESISTANCE: 100MΩ MIN. MEASURED BY 500 VDC
2. MECHANICAL CHARACTERISTICS:
   - 2-1. INSERTION FORCE : 0.4~3.0 KGF
   - 2-2. WITHDRAWAL FORCE : 0.3~2.0 KGF
3. LIFE TEST: 5,000 CYCLES MIN.
4. OTHER GENERAL SPEC. TO REFER "2SJ2285 SERIES SPEC".
5. TO CONFORM TO THE SINGATRON HAZARDOUS SUBSTANCE FREE SPEC.
6. HALOGEN FREE PRODUCT IDENTIFICATION MARK ON JACK: ◎
7. HALOGEN FREE PRODUCT IDENTIFICATION LABEL ON PACKAGING:
8. FOR REFLOW SOLDERING LEAD-FREE PROCESS.
9. PACKAGING:TAPE&REEL

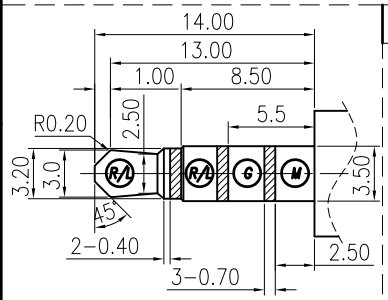

3.5ø 4 POLE PLUG

TOLERANCE:±0.05

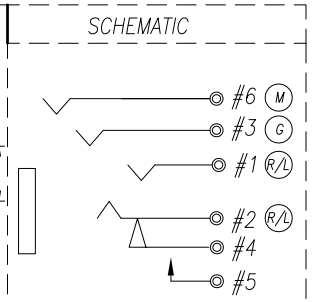

NO	DESCRIPTION	QTY	MATERIAL	PLATING & COLOR
G	SHIELD	1	COPPER ALLOY 0.20T	Gold flash on contact area all over Nickel Plated
F	TRANSFER TERMINAL	1	COPPER ALLOY 0.20T	Gold flash on contact area and Solder tail,all over Nickel Plated
E	MAKE TERMINAL	1	COPPER ALLOY 0.20T	
D	RING	1	COPPER ALLOY 0.20T	
C	TIP	1	COPPER ALLOY 0.25T	
B	EARTH	1	COPPER ALLOY 0.20T	Gold flash
A	BODY	1	HIGH TEMP.THERMOPLASTIC UL 94V-0	BLACK

UNLESS OTHERWISE SPECIFED TOLERANCES

DECIMALS: X :±0.5, X.X :±0.3, X.XX :±0.2

ANGLES: X :±2°, X.X :±1°

Singatron Enterprise Co., Ltd.
信音企業股份有限公司

TITLE	3.5ø PHONE JACK			
DWN	ZLS 2012.4.23	PART NO. 2SJ2326-012111F		
CHKD	ZJZ 2012.4.23	SCALE 3:1	UNIT: mm	
APVD	LIAO 2012.4.23	SIZE: A3	SHEET: 1OF1	REV: B

CUSTOMER COPY

文件編號: RD-06-043-A