REV.	ECN NO OR DESCRIPTION	REVISED	DATE
A	PRODUCT RELEASE	STICKY	2011.12.13
B	ECN NO.:C130226 UPDATE DRAWING	ZLS	2014.01.10

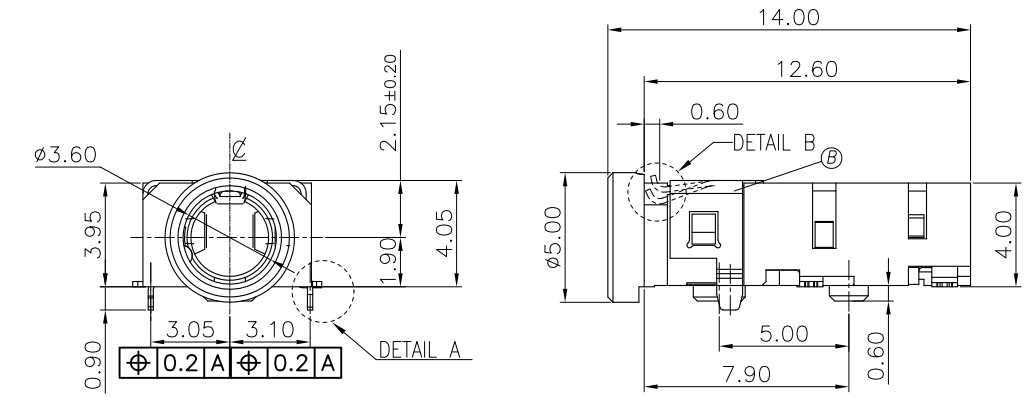

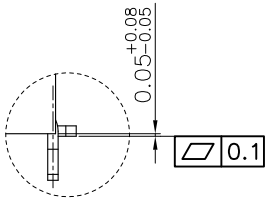

DETAIL A SCALE 10:1

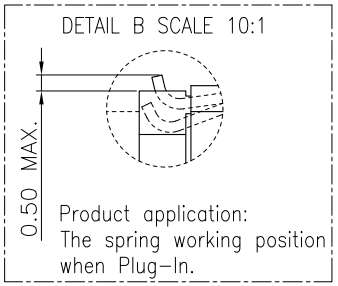

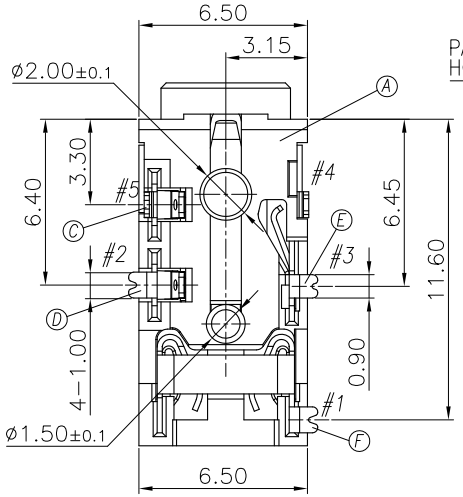

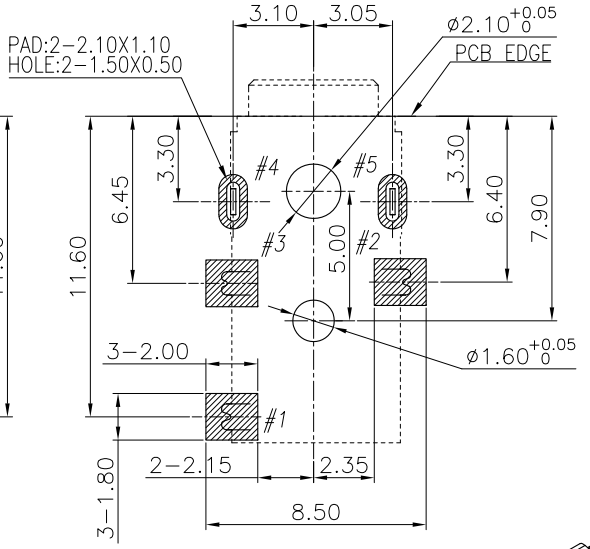

SPECIFICATIONS:

1. ELECTRICAL CHARACTERISTICS:
   1-1. RATING: 12V 1A
   1-2. CONTACT RESISTANCE: 30mΩ MAX.(INITIAL)
   1-3. DIELECTRIC WITHSTANDING VOLTAGE: 500V AC FOR ONE MINUTE.
   1-4. INSULATION RESISTANCE: 100MΩ MIN. MEASURED BY 500 VDC
2. MECHANICAL CHARACTERISTICS:
   2-1. INSERTION FORCE : 3.0 Kgf Max.
   2-2. WITHDRAWAL FORCE : 0.3 Kgf Min.
3. (B) LIFE TEST: 10,000 CYCLES
4. OTHER GENERAL SPEC. TO REFER "GENERAL SPEC".
5. TO CONFORM TO SINGATRON HAZARDOUS SUBSTANCE FREE SPEC.
6. HALOGEN FREE PRODUCT IDENTIFICATION MARK: ◎
7. HALOGEN FREE PRODUCT IDENTIFICATION LABEL ON PACKAGING: HF HAZARDOUS SUBSTANCE FREE
8. FOR REFLOW SOLDERING LEAD-FREE PROCESS.
9. PACKAGING: TAPE & REEL.

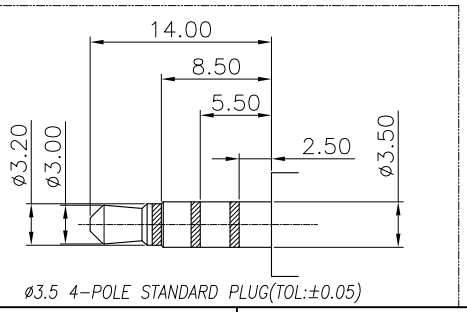

ø3.5 4-POLE STANDARD PLUG(TOL:±0.05)

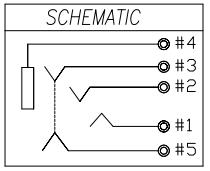

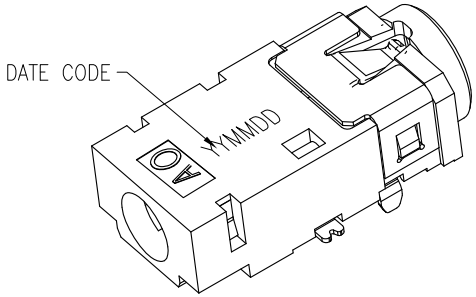

NO	DESCRIPTION	QTY	MATERIAL	PLATING & COLOR
F	TIP SPRING	1	COPPER ALLOY 0.20t	Gold Flash On Contact Area & Solder tail, All over Nickel Plated
E	RING-B1	1	COPPER ALLOY 0.2t	
D	RING-A	1	COPPER ALLOY 0.2t	
C	RING-B	1	COPPER ALLOY 0.2t	
B	EARTH	1	COPPER ALLOY 0.20t	
A	BODY	1	HIGH TEMP. THERMOPLASTIC UL94-V0	BLACK

UNLESS OTHERWISE SPECIFED TOLERANCES

Singatron Enterprise Co., Ltd.
信音企業股份有限公司

DECIMALS:	ANGLES:
X :±0.5	X :±2°
X.X :±0.3	X.X :±1°
X.XX :±0.2	

TITLE	ø3.5 PHONE JACK			
DWN	Kermit 14/1/20	PART NO. 2SJ2342-001111F		
CHKD	ZJZ 14/1/20	SCALE 5:1	UNIT: mm	
APVD	Liao 14/1/20	SIZE: A3	SHEET: 1OF1	REV: B

CUSTOMER COPY

文件編號 RD-06-043-A