REV.	ECN NO OR DESCRIPTION	REVISED	DATE
A	PRODUCT RELEASE	BILLY	2012.04.01

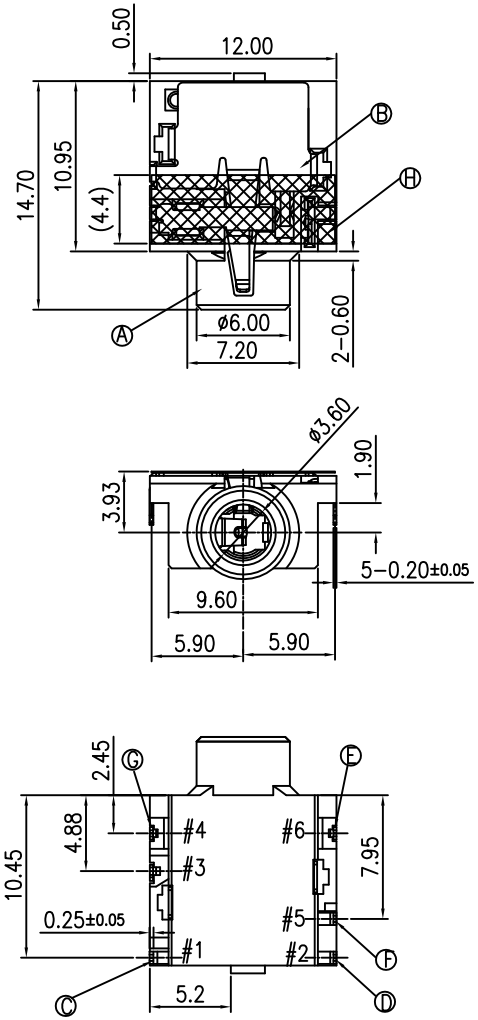

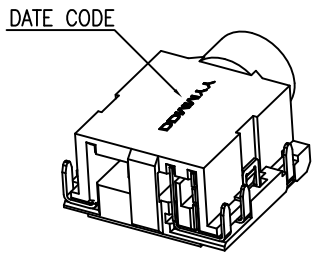

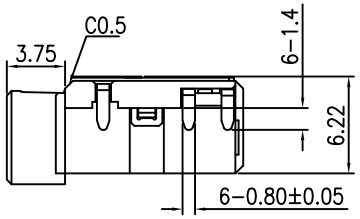

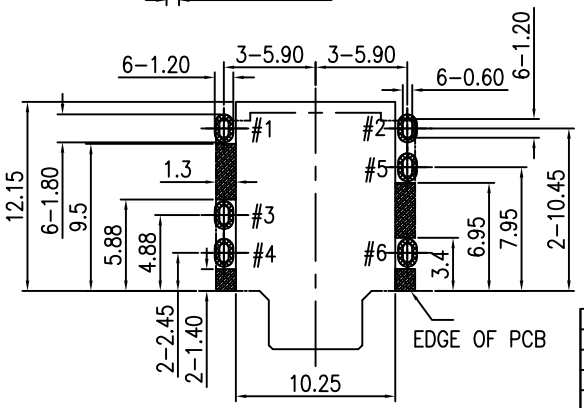

RECOMMENDED P.C.B. LAYOUT T=1.00

TOP VIEW (TOLRANCE: ±0.05)

STAND OFF AREA

SPECIFICATIONS:

1. ELECTRICAL CHARACTERISTICS:
   - 1-1. RATING: 36V, 1A.
   - 1-2. CONTACT RESISTANCE: 50m Ω MAX.
   - 1-3. DIELECTRIC WITHSTANDING VOLTAGE: 500V AC FOR ONE MINUTE.
   - 1-4. INSULATION RESISTANCE: 100MΩ MIN. MEASURED BY 500 VDC
2. MECHANICAL CHARACTERISTICS:
   - 2-1. INSERTION FORCE : 0.4~3.0 KGF
   - 2-2. WITHDRAWAL FORCE : 0.4~3.0 KGF
3. LIFE TEST: 5,000 CYCLES MIN.
4. OTHER GENERAL SPEC. TO REFER "2SJ2311 SERIES SPEC".
5. TO CONFORM TO THE SINGATRON HAZARDOUS SUBSTANCE FREE SPEC.
6. HALOGEN FREE PRODUCT IDENTIFICATION MARK ON JACK: ⊙
7. HALOGEN FREE PRODUCT IDENTIFICATION LABEL ON PACKAGING:
8. FOR REFLOW SOLDERING LEAD-FREE PROCESS.
9. PACKAGING:TAPE & REEL.

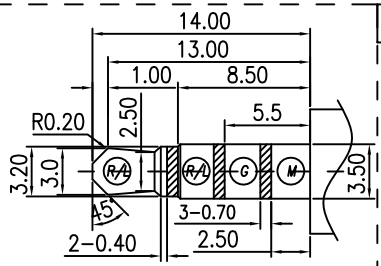

3.5ø 4 POLE PLUG

TOLERANCE:±0.05

SCHEMATIC

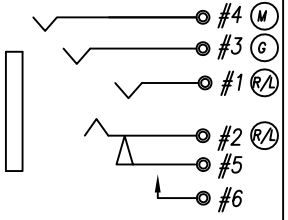

NO	DESCRIPTION	QTY	MATERIAL	PLATING & COLOR
H	MYLAR	1	MYLAR 0.075T	
G	EARTH	1	COPPER ALLOY 0.20T	Gold Flash on contact and solder tail, all over Nickel Plated.
F	TRANSFER TERMINAL	1	COPPER ALLOY 0.20T	
E	MAKE TERMINAL	1	COPPER ALLOY 0.20T	
D	RING	1	COPPER ALLOY 0.20T	
C	TIP	1	COPPER ALLOY 0.25T	
B	SHIELD	1	COPPER ALLOY 0.20T	NI PLATED
A	BODY	1	HIGH TEMP.THERMOPLASTIC UL 94V-0	BLACK

UNLESS OTHERWISE SPECIFED TOLERANCES

DECIMALS: X :±0.5, X.X :±0.3, X.XX :±0.2

ANGLES: X :±2°, X.X :±1°

Singatron Enterprise Co., Ltd.
信音企業股份有限公司

TITLE	3.5ø PHONE JACK		
DWN	BILLY 2012.4.1	PART NO. 2SJ2352-000141F	
CHKD	ZJZ 2012.4.1	SCALE 1:1	UNIT: mm
APVD	LMO 2012.4.1	SIZE: A3	SHEET: 1OF1 REV: A

CUSTOMER COPY

文件編號 RD-06-043-A