REV.	ECN NO OR DESCRIPTION	REVISED	DATE
A	PDR NO.T130118-10A	HM-JIANG	2013.03.08
B	ECN NO.S130627	ANDY	2013.11.21

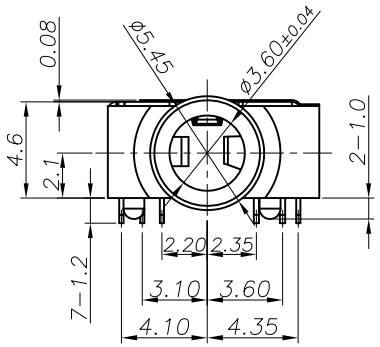

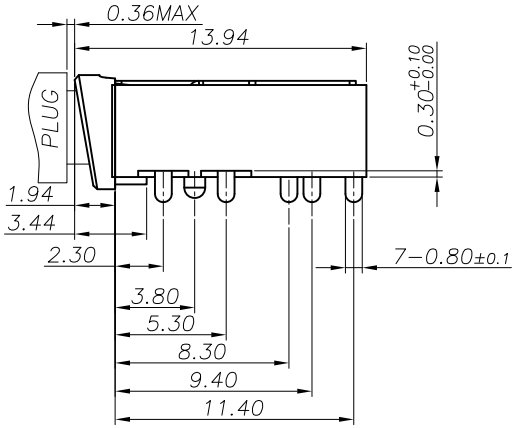

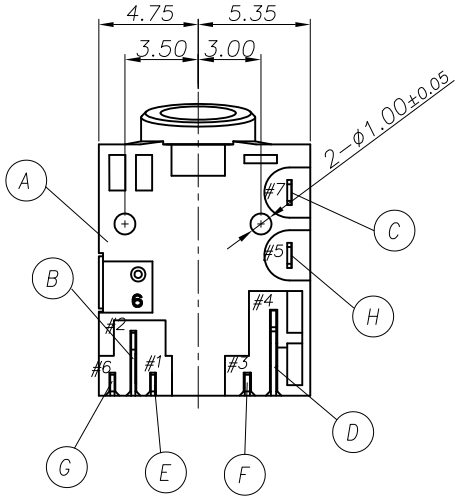

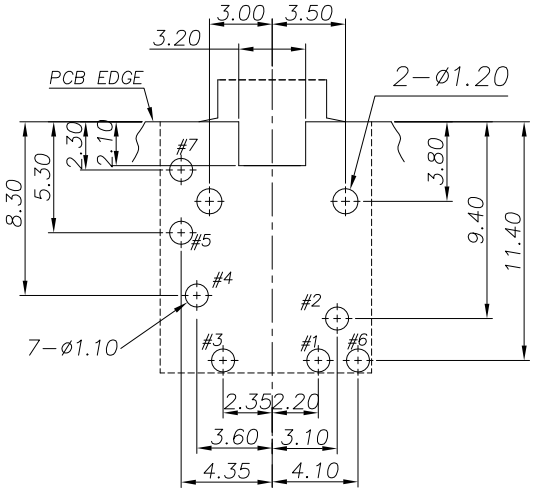

RECOMMENDED PCB LAYOUT
TOP VIEW (TOLERANCE: ±0.05)

SPECIFICATIONS:

1. ELECTRICAL CHARACTERISTICS:
   1-1. RATING: 12V 1A
   1-2. CONTACT RESISTANCE: 30mΩ MAX.(INITIAL)
   1-3. DIELECTRIC WITHSTANDING VOLTAGE: 500V AC FOR ONE MINUTE
   1-4. INSULATION RESISTANCE: 100MΩ MIN. MEASURED BY 500 VDC
2. MECHANICAL CHARACTERISTICS:
   2-1. INSERTION FORCE : 0.3~3.0 KGF
   2-2. WITHDRAWAL FORCE : 0.3~3.0 KGF
3. LIFE TEST: 5,000 CYCLES.
4. OTHER GENERAL SPEC. TO REFER "2SJ3005 SERIES SPEC".
5. TO CONFORM TO SINGATRON HAZARDOUS SUBSTANCE FREE SPEC.
6. HALOGEN FREE PRODUCT IDENTIFICATION MARK ON JACK: ◎
7. HALOGEN FREE PRODUCT IDENTIFICATION LABEL ON PACKAGING:

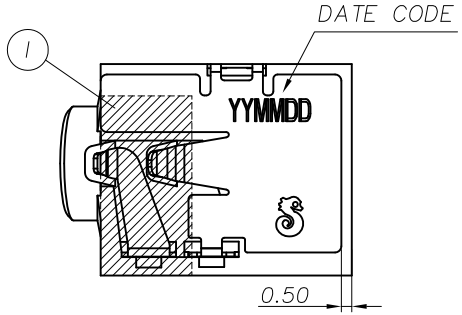

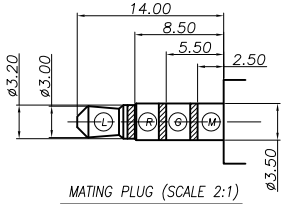

MATING PLUG (SCALE 2:1)
TOLERANCE:±0.05

SCHEMATIC

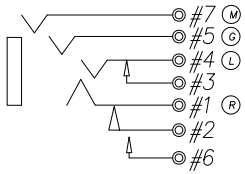

NO	DESCRIPTION	QTY	MATERIAL	PLATING & COLOR
I	MALAY	1	INSULATION FILM	YELLOW
H	SHELL	1	COPPER ALLOY, 0.2t	120u" Matte Sn ON SOLDER AREA OVER Ni 50u"Min.
G	BREAK TERMINAL	1	COPPER ALLOY, 0.2t	GOLD FLASH ON CONTACT AREA; 120u" Matte Sn ON SOLDER AREA; ALL OVER Ni 50u".
F	SHUNT TERMINAL	1	COPPER ALLOY, 0.2t	GOLD FLASH OVER Ni 50u"Min.
E	RING SPRING	1	COPPER ALLOY, 0.2t	GOLD FLASH ON CONTACT AREA; 120u" Matte Sn ON SOLDER AREA; ALL OVER Ni 50u".
D	TIP SPRING	1	COPPER ALLOY,0.25t	GOLD FLASH OVER Ni 50u"Min.
C	EARTH	1	COPPER ALLOY, 0.2t	GOLD FLASH OVER Ni 50u"Min.
B	TRANSFER TERMINAL	1	COPPER ALLOY, 0.2t	GOLD FLASH ON CONTACT AREA; 120u" Matte Sn ON SOLDER AREA; ALL OVER Ni 50u".
A	BODY	1	NYLON-6T.UL 94V-0	BLACK

UNLESS OTHERWISE SPECIFED TOLERANCES

DECIMALS:
X :±0.5
X.X :±0.3
X.XX :±0.2

ANGLES:
X :±2°
X.X :±1°

Singatron Enterprise Co., Ltd.
信音企業股份有限公司

TITLE	3.5ø PHONE JACK			
DWN	ANDY	PART NO. 2SJ3005-027111F		
CHKD	CERRY	SCALE:4:1	UNIT: mm	
APVD	MAX	SIZE: A3	SHEET:1 OF 1	REV:B

CUSTOMER COPY

文件編號: RD-06-043-A