REV.	ECN NO OR DESCRIPTION	REVISED	DATE
A	PDR NO:T131105-15A	Owen	2014.01.06
B	ECN NO:S170742-C B	JIE-FU	2017.08.23

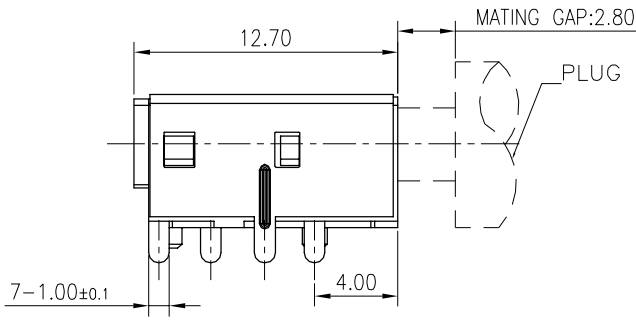

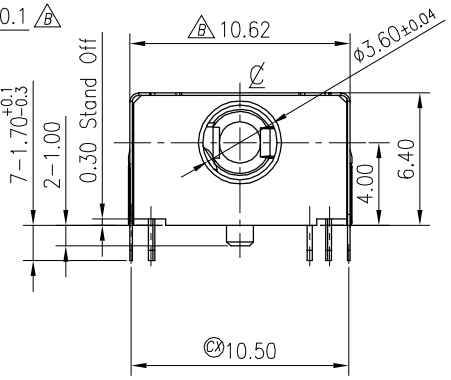

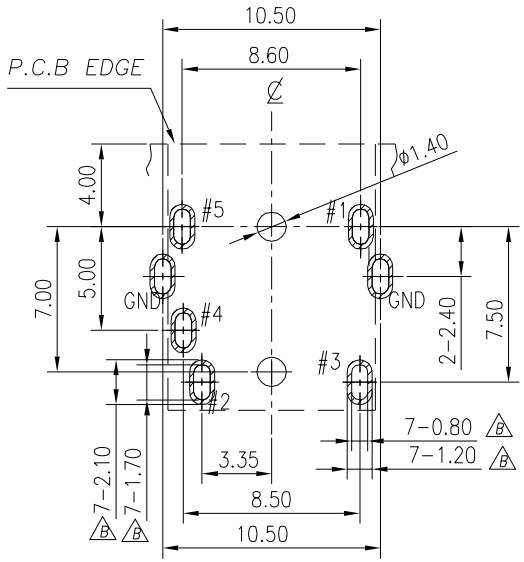

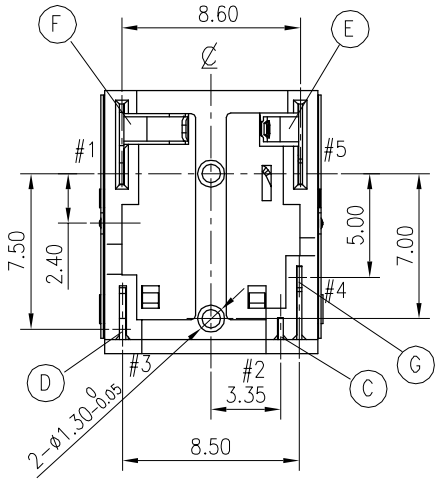

SPECIFICATIONS:

1. ELECTRICAL CHARACTERISTICS:
   1-1.RATING: 12V 1A
   1-2. CONTACT RESISTANCE: 30mΩMAX(INITAIL).
   1-3. DIELECTRIC VOLTAGE WITHSTAND: 500V AC FOR ONE MINUTE
   1-4. INSULATION RESISTANCE: 100MΩMIN. MEASURED BY 500 VDC
2. MECHANICAL CHARACTERISTICS:
   2-1. INSERTED FORCE : 0.3~3.0 KG (INITAIL)
   2-2. WITHDRAWAL FORCE : 0.3~3.0 KG (INITAIL)
3. LIFE TEST: 5,000 CYCLES MIN.
4. PACKAGING: TAPE & REEL
5. TO CONFORM TO SINGATRON HAZARDOUS SUBSTANCE FREE SPECIFICATION.
6. HALOGEN FREE PRODUCT IDENTIFICATION MARK ON PRODUCT: ◎
7. HALOGEN FREE PRODUCT IDENTIFICATION LOGO ON PACKAGING:

RECOMMEND PCB LAYOUT

TOP VIEW (TOLERANCE: ±0.05)

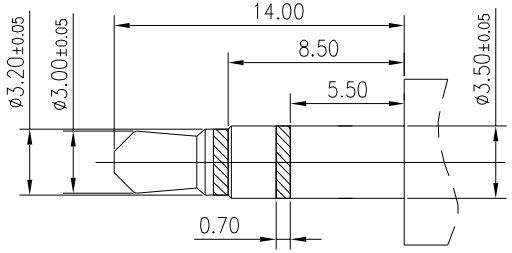

RECOMMENDED PLUG

ø3.5 3-POLE STANDARD PLUG

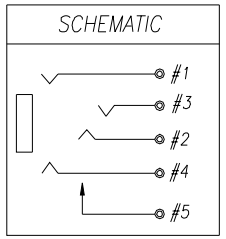

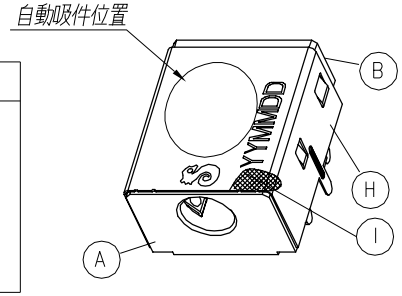

NO	DESCRIPTION	QTY	MATERIAL	PLATING & COLOR
I	MYLAR	1	MYLAR 0.060t	YELLOW
H	SHIELDING	1	STAINLESS STEEL ,0.12T	ALL OVER 60uin NCKEL PLATING
G	EARTH SPRING-A	1	PHOSPHOR BRONZE,0.25T	GOLD FLASH ON CONTACT AND SOLDER TAIL AREA ALL OVER 50uin NCKEL PLATING
F	EARTH SPRING-B	1	PHOSPHOR BRONZE,0.20T	
E	EARTH SPRING	1	BRASS,0.20T	
D	TIP SPRING	1	PHOSPHOR BRONZE,0.25T	
C	RING SPRING	1		
B	CASE	1	LCP+30%GF E1301 UL 94V-0	BLACK
A	BODY	1		

UNLESS OTHERWISE SPECIFED TOLERANCES

DECIMALS: X :±0.5, X.X :±0.3, X.XX :±0.2

ANGLES: X :±2°, X.X :±1°

Singatron Enterprise Co., Ltd.
信音企業股份有限公司

TITLE	ø3.5 PHONE JACK			
DWN	JIE-FU	PART NO.2SJ3006-019311F		
CHKD	BRUCE	SCALE 4:1	UNIT: mm	
APVD	LUSSEN	SIZE: A3	SHEET:1 OF 1	REV:B

CUSTOMER COPY

文件編號:RD-06-043-A