REV.	ECN NO OR DESCRIPTION	REVISED	DATE
A	PDR NO.T110728-7A	HM-JIANG	2012.02.27
B	ECN NO.S120767	ANDY	2012.10.24

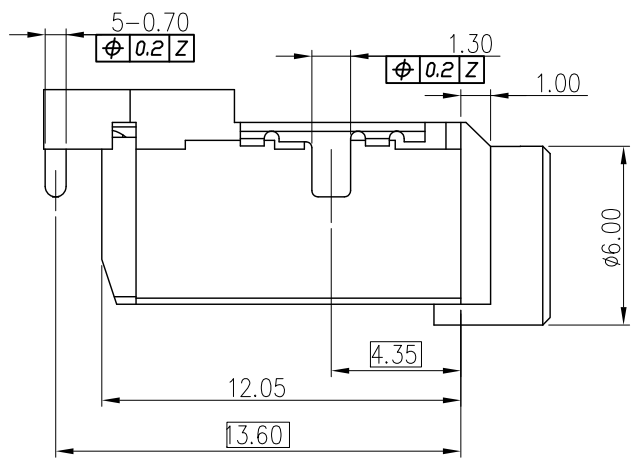

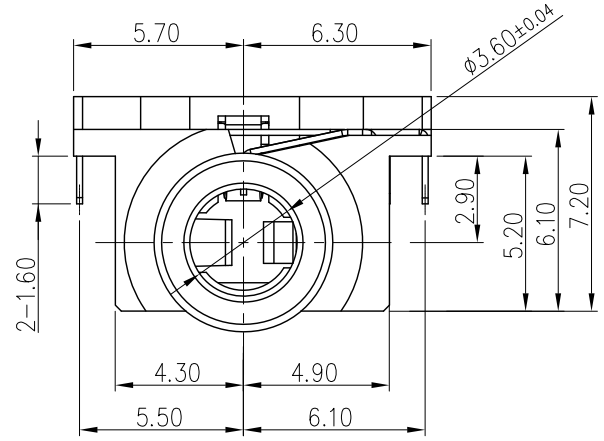

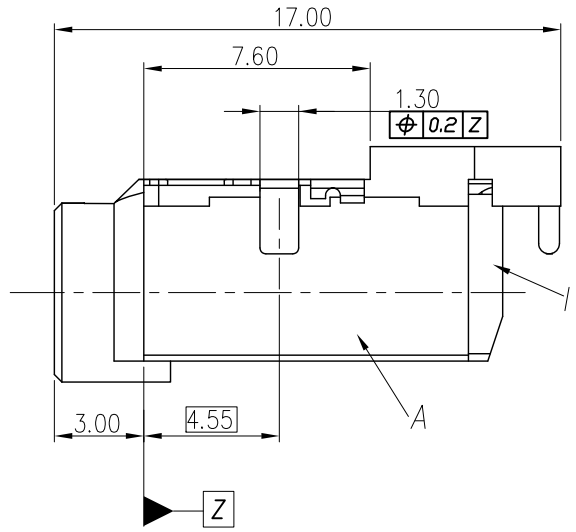

SPECIFICATIONS:

1. INSULATION RESISTANCE BETWEEN ANY ADJACENT OPEN CIRCUIT TERMINAL SHELL NOT BE LESS THAN 100MΩ MEASURED BY 500 VDC MEGGER.
2. INSULATION VOLTAGE WITHSTAND: 500V AC FOR ONE MINUTE.
3. CONTACT RESISTANCE: 30mΩ MAX.
4. UNLESS OTHERWISE SPECIFIED. TEST IS TO BE MADE AT 5-35℃ IN TEMPERATURE AND 45-85% IN HUMIDITY. BUT,IF ANY VAGUE DATA IS OCCURED ON TEST RESULT, ANOTHER TEST SHALL BE MADE AT 20℃±2℃ IN TEMP., 60-70% IN HUMIDITY.
5. LIFE TEST: 5,000 CYCLES MIN. (NON-LOAD)
6. INSERTION FORCE: 0.4 - 3Kg.
7. WITHDRAWAL FORCE: 0.4- 3Kg.
8. AFTER LIFE TEST, CONTACT RESISTANCE: 50mΩ MAX.
9. AFTER HUMIDITY TEST, INSULATION RESISTANCE: 50MΩ MIN.
10. MARKING: MARK" " ON TOP OF CONNECTOR.
11. PACKAGING : TAPE & REEL.
12. TO CONFORM TO SINGATRON HAZARDOUS SUBSTANCE FREE SPEC.
13. HALOGEN FREE PRODUCT IDENTIFICATION MARK ON PRODUCT:
14. HALOGEN FREE PRODUCT IDENTIFICATION LOGO ON PACKAGING:

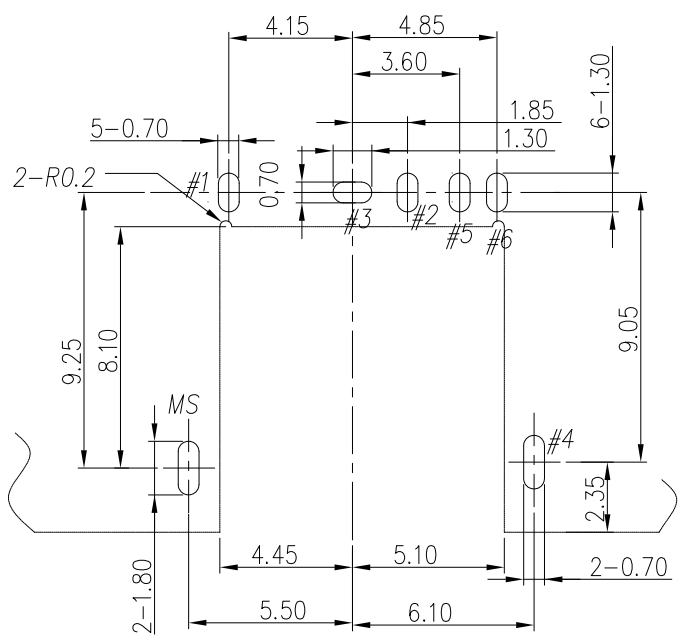

RECOMMENDED PCB LAYOUT

TOP VIEW ; TOL.±0.05

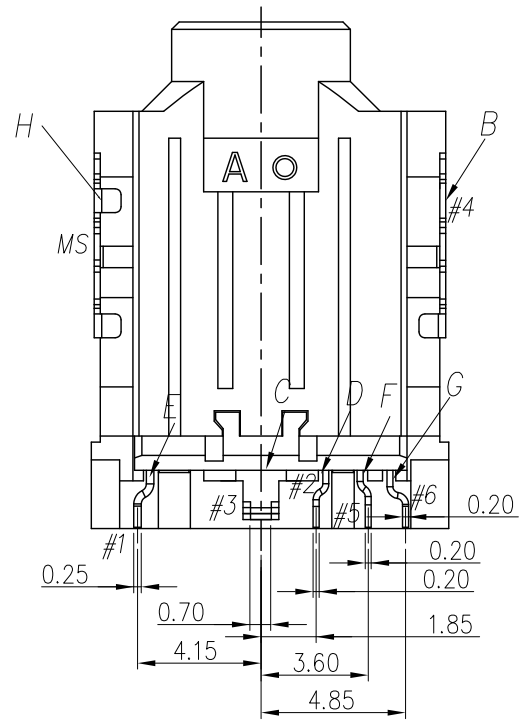

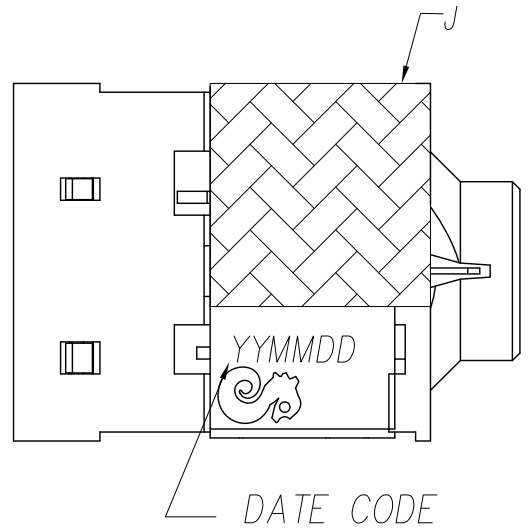

NO	DESCRIPTION	QTY	MATERIAL	PLATING & COLOR
J	MYLAR	1	KAPTON	YELLOW
I	COVER	1	HIGH TEMP.THERMOPLASTIC UL 94V-0	BLACK
H	SHELL	1	PHOSPHOR BRONZE, 0.2t	NICKET 50u" MIN.
G	MAKE TERMINAL	1	PHOSPHOR BRONZE, 0.2t	GOLD FLASH OVER NICKET 50u" MIN. PLATING
F	TRANSFER TERMINAL	1	PHOSPHOR BRONZE, 0.2t	
E	TIP SPRING	1	PHOSPHOR BRONZE, 0.25t	
D	RING-A	1	PHOSPHOR BRONZE, 0.2t	
C	RING-B	1	PHOSPHOR BRONZE, 0.2t	
B	EARTH	1	PHOSPHOR BRONZE, 0.2t	GOLD FLASH ON CONTACT AREA, TIN 120u"MIN. ON SOLDER TAIL, All OVER NICKET 50u" MIN. PLATING.
A	BODY	1	HIGH TEMP.THERMOPLASTIC UL 94V-0	BLACK

SCHEMATIC

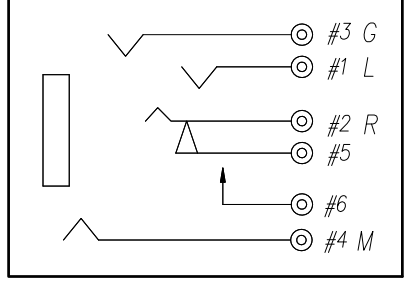

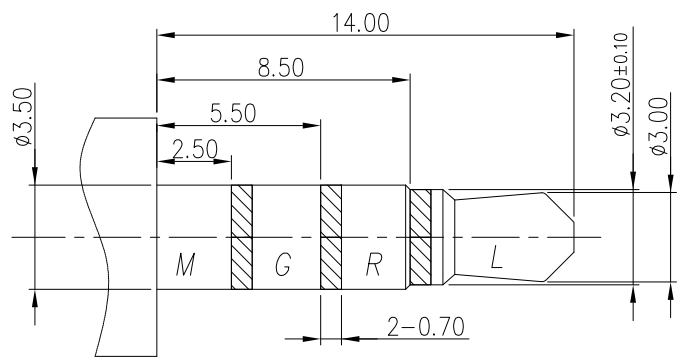

RECOMMENDED PLUG(±0.05)

ø3.5 4-POLE STANDARD PLUG

UNLESS OTHERWISE SPECIFED TOLERANCES

DECIMALS: X :±0.5 X.X :±0.3 X.XX :±0.2

ANGLES: X :±2° X.X :±1°

Singatron Enterprise Co., Ltd.
信音企業股份有限公司

TITLE	3.5ø PHONE JACK			
DWN	ANDY	PART NO.2SJ3013-003311F		
CHKD	TOM	SCALE: 4:1	UNIT: mm	
APVD	QUAN	SIZE: A3	SHEET: 1 OF 1	REV: B

CUSTOMER COPY

文件編號:RD-06-043-A