REV.	ECN NO OR DESCRIPTION	REVISED	DATE
A	PDR NO: T140306-10A	Kevin	2014.05.06

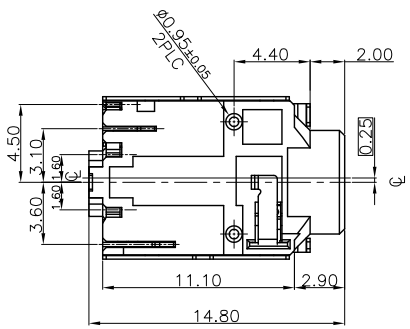

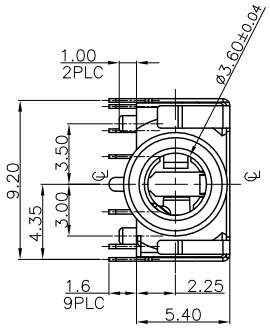

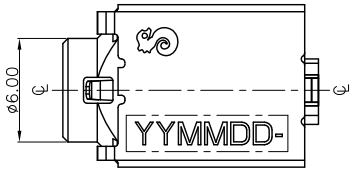

SPECIFICATIONS:

1. ELECTRICAL CHARACTERISTICS:
   - 1-1. RATING: 12V 1A
   - 1-2. CONTACT RESISTANCE: 30mΩ MAX.(INITIAL)
   - 1-3. DIELECTRIC WITHSTANDING VOLTAGE: 500V AC FOR ONE MINUTE.
   - 1-4. INSULATION RESISTANCE: 100MΩ MIN. MEASURED BY 500V DC
2. MECHANICAL CHARACTERISTICS:
   - 2-1. INSERTION FORCE : 0.3~3.0 KGF
   - 2-2. WITHDRAWAL FORCE : 0.3~3.0 KGF
3. LIFE TEST: 5,000 CYCLES MIN.
4. OTHER GENERAL SPEC. TO REFER "2SJ3015 SERIES SPEC".
5. TO CONFORM TO SINGATRON HAZARDOUS SUBSTANCE FREE SPEC.
6. HALOGEN FREE PRODUCT IDENTIFICATION MARK ON PRODUCT:
7. HALOGEN FREE PRODUCT IDENTIFICATION LOGO ON PACKAGING:
8. FOR REFLOW SOLDERING LEAD-FREE PROCESS.

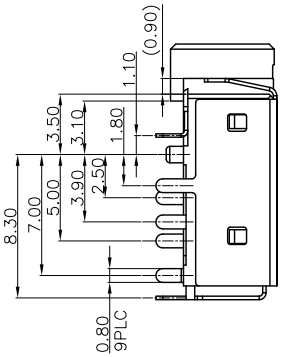

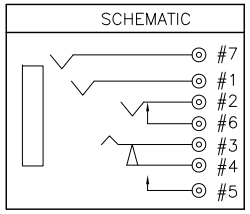

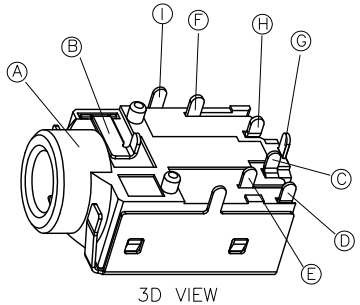

3D VIEW

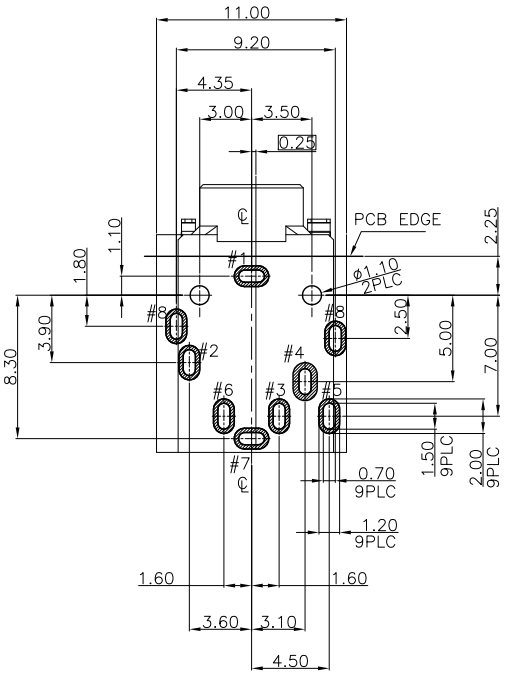

RECOMMENDED PCB LAYOUT(TOP VIEW)

(TOLERANCE: ±0.05)

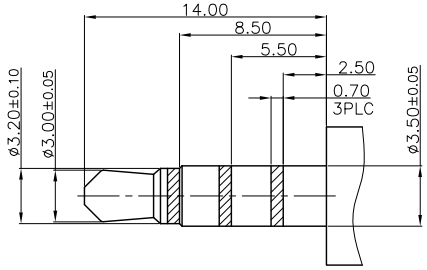

RECOMMENDED PLUG

4-POLE(TOLERANCE: ±0.05)

NO	DESCRIPTION	QTY	MATERIAL	PLATING & COLOR
I	SHIELDING	1	PHOSPHOR BRONZE 0.2t	Ni 60uin MIN.
H	SHUNT TERMINAL-A	1	BRASS 0.25t	Ag 20uin over Ni 60uin
G	EARTH-B	1	PHOSPHOR BRONZE 0.2t	GOLD FLASH ON CONTACT AREA; 120u" Matte SN ON SOLDER TAIL AREA; ALL OVER 50u" Ni.
F	TIP SPRING	1	PHOSPHOR BRONZE 0.25t	
E	TRANSFER TERMINAL	1	PHOSPHOR BRONZE 0.2t	GOLD FLASH PLATING ALL OVER 50uin Nicket Plating.
D	BREAK TERMINAL	1	PHOSPHOR BRONZE 0.2t	
C	RING SPRING	1	PHOSPHOR BRONZE 0.2t	
B	EARTH-A	1	PHOSPHOR BRONZE 0.2t	
A	BODY	1	HIGH TEMP.THERMOPLASTIC UL 94V-0	BLACK

UNLESS OTHERWISE SPECIFED TOLERANCES

Singatron Enterprise Co., Ltd.
信音企業股份有限公司

DECIMALS: X :±0.5 X.X :±0.3 X.XX :±0.2

ANGLES: X :±2° X.X :±1°

TITLE	ø3.50 AUDIO JACK		
DWN	Kevin	PART NO. 2SJ3015-024111F	
CHKD	Bruce	SCALE:4:1	UNIT: mm
APVD	Lussen	SIZE: A3	SHEET:1 OF 1 REV: A

CUSTOMER COPY

文件編號 RD-06-043-A