REV.	ECN NO OR DESCRIPTION	REVISED	DATE
A	PDR NO: T111116-2A	Eileen	2012.03.26
B	ECN NO: S120946	Cerry	2012.11.28
C	ECN NO: S150453-M (C)	Cerry	2015.07.01

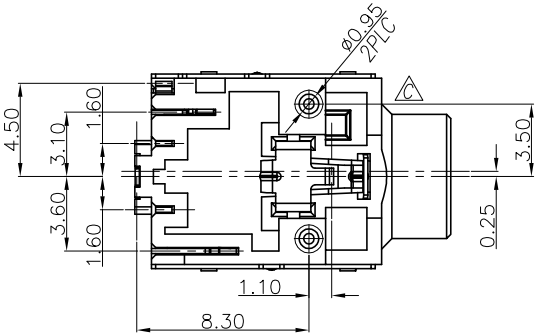

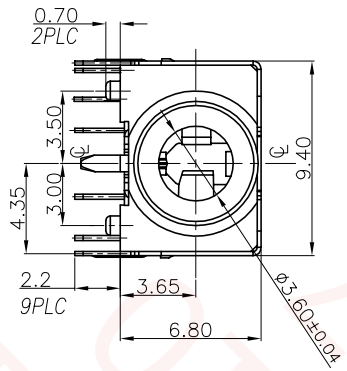

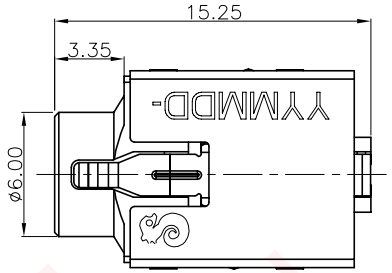

SPECIFICATIONS:

1. INSULATION RESISTANCE BETWEEN ANY ADJACENT OPEN CIRCUIT TERMINAL SHELL NOT BE LESS THAN 100MΩ MEASURED BY 500 VDC.
2. CONTACT RESISTANCE: 50mΩ MAX.
3. INSULATION VOLTAGE WITHSTAND:500V AC FOR ONE MINUTE.
4. UNLESS OTHERWISE SPECIFIED. TEST IS TO BE MADE AT 5-35°C IN TEMPERATURE AND 45-85% IN HUMIDITY. BUT,IF ANY VAGUE DATA IS OCCURED ON TEST RESULT, ANOTHER TEST SHALL BE MADE AT 20°C±2°C IN TEMP., 60-70% IN HUMIDITY.
5. LIFE TEST: 5,000 CYCLES MIN.
6. INSERTION FORCE: 0.3 - 3Kg.
7. WITHDRAWAL FORCE: 0.3 - 2Kg.
8. AFTER LIFE TEST, CONTACT RESISTANCE: 60mΩ MAX.
9. AFTER HUMIDITY TEST, INSULATION RESISTANCE: 50MΩ MIN.
10. MARKING: MARK" " ON TOP OF CONNECTOR.
11. PACKAGING : TAPE & REEL.
12. TO CONFORM TO SINGATRON HAZARDOUS SUBSTANCE FREE SPEC.
13. HALOGEN FREE PRODUCT IDENTIFICATION MARK ON PRODUCT:
14. HALOGEN FREE PRODUCT IDENTIFICATION LOGO ON PACKAGING:
15. IR REFLOW TEMPERATURE>220°C FOR 45s~90s; PEAK TEMPERATURE:260°C Max.

SCHEMATIC

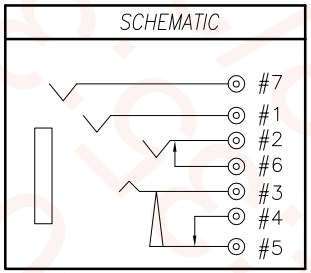

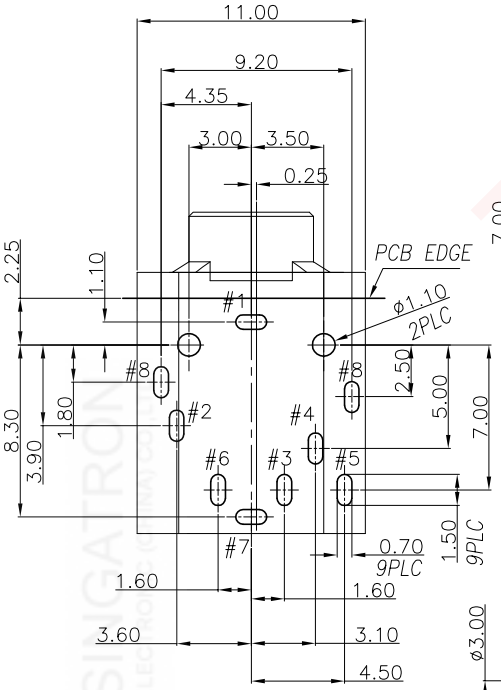

RECOMMENDED PCB LAYOUT(TOP VIEW)

(TOLERANCE: ±0.05)

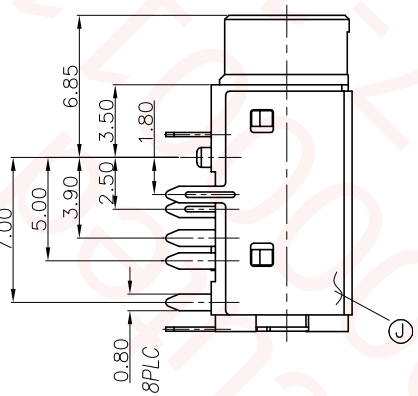

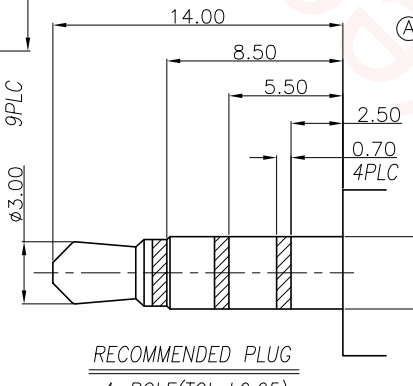

RECOMMENDED PLUG

4-POLE(TOL:±0.05)

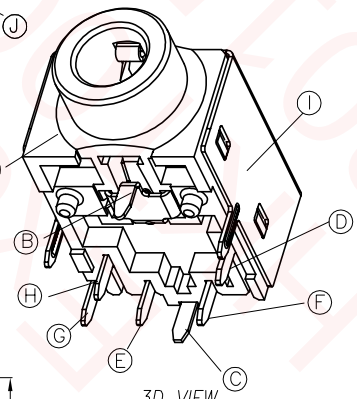

3D VIEW

NO	DESCRIPTION	QTY	MATERIAL	PLATING & COLOR
J	MYLAR	1	T=0.40mm.	N/A
I	SHIELDING	1	COPPER ALLOY 0.2t	Ni 60u" MIN.
H	TRANSFER TERMINAL	1	COPPER ALLOY 0.2t	120u" Sn ON SOLDER GOLD FLASH ON CONTACT AREA ALL OVER 50u" Ni.
G	BREAK TERMINAL	1	COPPER ALLOY 0.2t	
F	SHUNT TERMINAL-A	1	COPPER ALLOY 0.25t	GOLD FLASH ON CONTACT AREA OVER 50u" Ni.
E	RING-B	1	COPPER ALLOY 0.2t	120u" Sn ON SOLDER Au 30u" Min. ON CONTACT AREA ALL OVER 50u" Ni.
D	TIP SPRING	1	COPPER ALLOY 0.25t	
C	EARTH-A	1	COPPER ALLOY 0.2t	
B	RING-A	1	COPPER ALLOY 0.2t	
A	BODY	1	HIGH TEMP.THERMOPLASTIC UL 94V-0	BLACK

UNLESS OTHERWISE SPECIFED TOLERANCES

DECIMALS: X :±0.5, X.X :±0.3, X.XX :±0.2

ANGLES: X :±2°, X.X :±1°

Singatron Enterprise Co., Ltd.
信音企業股份有限公司

TITLE	ø3.50 AUDIO JACK		
DWN	Cerry	PART NO. 2SJ3020-012111F	
CHKD		SCALE:4:1	UNIT: mm
APVD	Liao	SIZE: A3	SHEET:1 OF 1	REV: C

CUSTOMER COPY

文件編號: RD-06-043-A