REV.	ECN NO OR DESCRIPTION	REVISED	DATE
A	PDR NO: T121130-3A/3B	BRUCE	2013.06.30

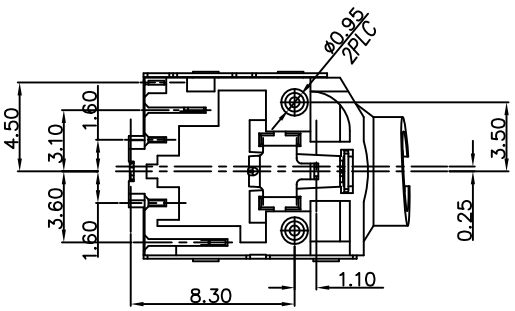

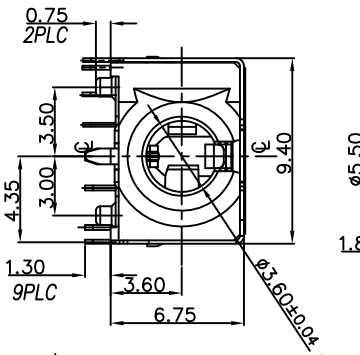

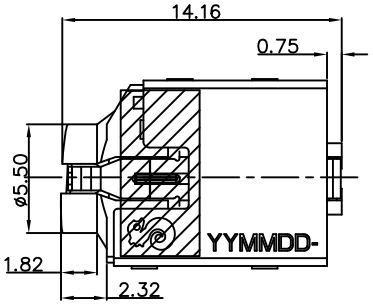

SPECIFICATIONS:

1. INSULATION RESISTANCE BETWEEN ANY ADJACENT OPEN CIRCUIT TERMINAL SHELL NOT BE LESS THAN 100MΩ MEASURED BY 500 VDC MEGGER.
2. CONTACT RESISTANCE: 50mΩ MAX(INITIAL).
3. INSULATION VOLTAGE WITHSTAND:500V AC FOR ONE MINUTE.
4. LIFE TEST: 5,000 CYCLES MIN.
5. INSERTION FORCE: 0.3-3.0Kgf ,
6. WITHDRAWAL FORCE: 0.3-3.0 Kgf,
7. AFTER LIFE TEST, CONTACT RESISTANCE: 100mΩ MAX.
8. AFTER HUMIDITY TEST, INSULATION RESISTANCE: 60MΩ MIN.
9. MARKING: MARK" ON TOP OF CONNECTOR.
10. PACKING : TAPE & REEL.
11. TO CONFORM TO SINGATRON HAZARDOUS SUBSTANCE FREE SPEC.
12. HALOGEN FREE PRODUCT IDENTIFICATION MARK ON PRODUCT:
13. HALOGEN FREE PRODUCT IDENTIFICATION LOGO ON PACKAGING:

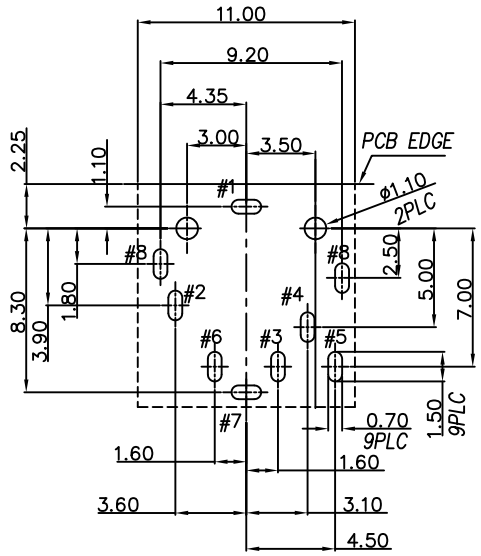

RECOMMENDED PCB LAYOUT(TOP VIEW)
(TOLERANCE: ±0.05)

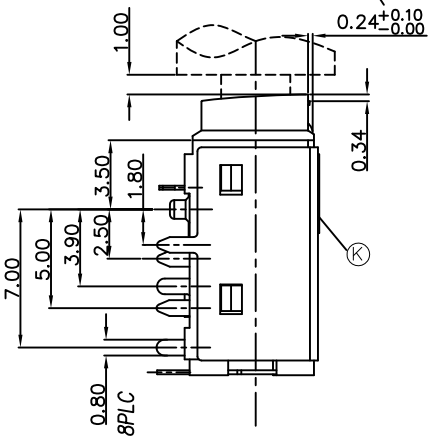

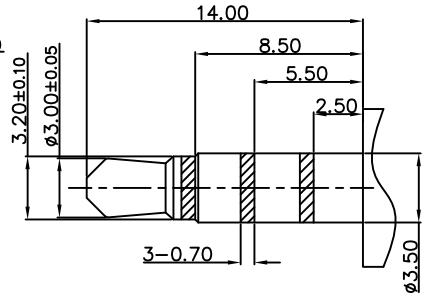

RECOMMENDED PLUG
4-POLE

K	MYLAR	1		
J	MYLAR	1	T=0.40mm.	N/A
I	SHIELDING	1	PHOSPHOR BRONZE 0.2t	Ni 60u" MIN.
H	TRANSFER TERMINAL	1	PHOSPHOR BRONZE 0.2t	120u" Sn ON SOLDER GOLD FLASH ON CONTACT AREA ALL OVER 50u" Ni.
G	BREAK TERMINAL	1	PHOSPHOR BRONZE 0.2t	
F	SHUNT TERMINAL-A	1	BRASS 0.25t	GOLD FLASH ON CONTACT AREA OVER 50u" Ni.
E	RING-B	1	PHOSPHOR BRONZE 0.2t	SEE TABLE "1"
D	TIP SPRING	1	PHOSPHOR BRONZE 0.25t	
C	EARTH-A	1	PHOSPHOR BRONZE 0.2t	
B	RING-A	1	PHOSPHOR BRONZE 0.2t	
A	BODY	1	HIGH TEMP.THERMOPLASTIC UL 94V-0	BLACK
NO	DESCRIPTION	QTY	MATERIAL	PLATING & COLOR

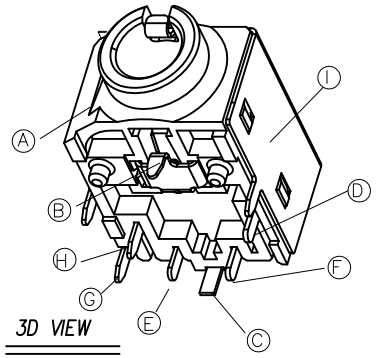

3D VIEW

SCHEMATIC

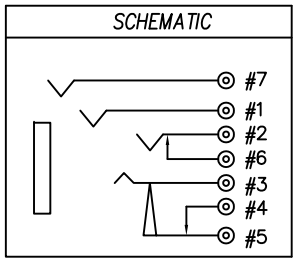

TABLE 1 :

P/N	PART	PLATING SPEC
2SJ3020-022111F	RING-B TIP SPRING	Au 30u" Min. ON CONTACT AREA Matt Sn 80u" ON SOLDER TAIL ALL OVER 50u" Ni.
	EARTH-A	Au 30u" Min. ON CONTACT AREA Sn 80u" ON SOLDER TAIL ALL OVER 50u" Ni.
	RING-A	Au 30u" Min. ON CONTACT AREA GOLD FLASH ON SOLDER TAIL ALL OVER 50u" Ni.
2SJ3020-023111F	RING-B TIP SPRING	GOLD FLASH ON CONTACT AREA; Matt Sn 80u" ON SOLDER TAIL ALL OVER Ni 50u"Min.
	EARTH-A	GOLD FLASH ON CONTACT AREA; Sn 80u" ON SOLDER TAIL ALL OVER Ni 50u"Min.
	RING-A	GOLD FLASH ON CONTACT AREA GOLD FLASH ON SOLDER ALL OVER 50u" Ni.

UNLESS OTHERWISE SPECIFED TOLERANCES

DECIMALS: X :±0.5, X.X :±0.3, X.XX :±0.2

ANGLES: X :±2°, X.X :±1°

Singatron Enterprise Co., Ltd.
信音企業股份有限公司

TITLE	ø3.50 AUDIO JACK			
DWN	Bruce	PART NO. 2SJ3020-02X111F		
CHKD	Sky	SCALE: 4:1	UNIT: mm	
APVD	Lussen	SIZE: A3	SHEET: 1 OF 1	REV: A

CUSTOMER COPY

文件編號: RD-06-043-A