REV.	ECN NO OR DESCRIPTION	REVISED	DATE
A	PDR No.T121224-3A	MARS	2013.04.23
B	ECN No.S130579 B	MARS	2013.05.30

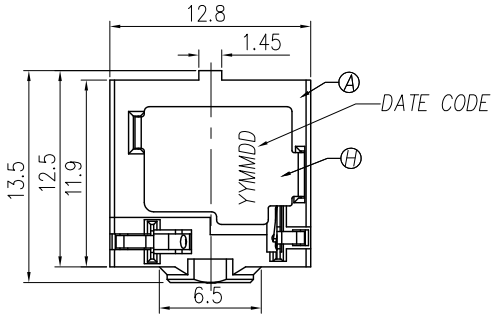

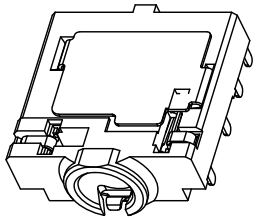

3D VIEW

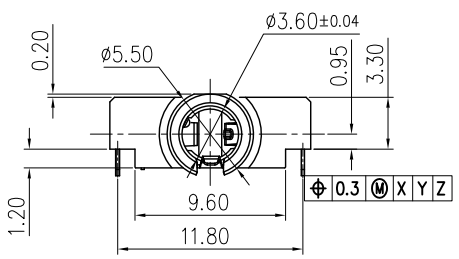

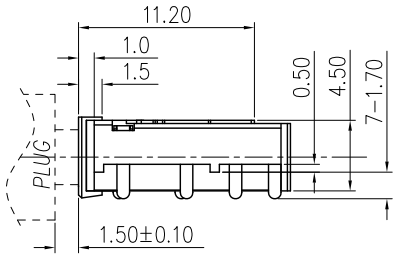

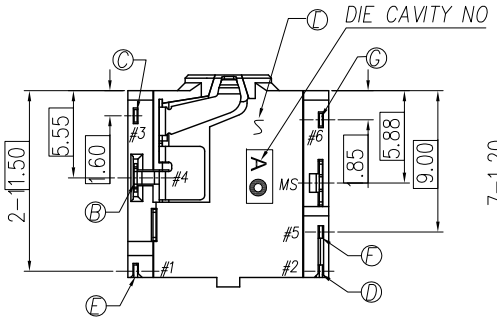

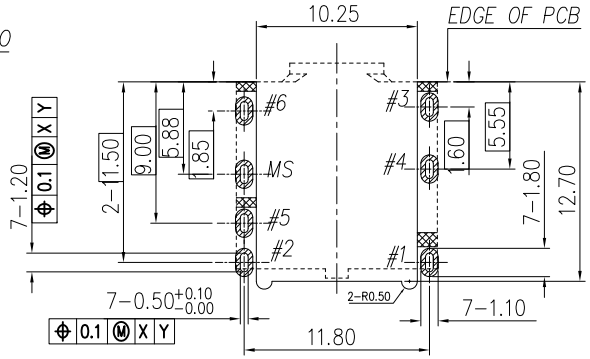

RECOMMENDED P.C.B. LAYOUT T=1.20

TOP VIEW (TOLRANCE: ±0.05)

2 STAND OFF AREA

SPECIFICATIONS:

1. ELECTRICAL CHARACTERISTICS:
   - 1-1. RATING: 12V 1A
   - 1-2. CONTACT RESISTANCE: 50mΩ MAX.
   - 1-3. DIELECTRIC WITHSTANDING VOLTAGE: 500V AC FOR ONE MINUTE.
   - 1-4. INSULATION RESISTANCE: 100MΩ MIN. MEASURED BY 500 VDC
2. MECHANICAL CHARACTERISTICS:
   - 2-1. INSERTION FORCE : 0.3~3.0 KGF
   - 2-2. WITHDRAWAL FORCE : 0.3~3.0 KGF
3. LIFE TEST: 5,000 CYCLES MIN.
4. OTHER GENERAL SPEC. TO REFER "2SJ3052 SERIES SPEC".
5. TO CONFORM TO THE SINGATRON HAZARDOUS SUBSTANCE FREE SPEC.
6. B HALOGEN FREE PRODUCT IDENTIFICATION MARK ON PRODUCT:
7. B HALOGEN FREE PRODUCT IDENTIFICATION LOGO ON PACKAGING:
8. FOR REFLOW SOLDERING LEAD-FREE PROCESS.
9. DATE CODE: YYMMDD — Day, Month, Year

NO	DESCRIPTION	QTY	MATERIAL	PLATING & COLOR
I	SEPARATOR	1	HIGH TEMP.THERMOPLASTIC UL 94V-0	BLACK
H	SHELL	1	COPPER ALLOY 0.20T	MATTE Sn 120u" ON SOLDER AREA OVER Ni 50u" Min.
G	MAKE TERMINAL	1	COPPER ALLOY 0.20T	GOLD FLASH CONTACT AREA &SOLDER TAIL OVER Ni 50u" Min.
F	TRANSFER TERMINAL	1	COPPER ALLOY 0.20T	GOLD FLASH CONTACT AREA MATTE Sn 120u" ON SOLDER AREA ALL OVER Ni 50u" Min.
E	TIP SPRING	1	COPPER ALLOY 0.20T	
D	RING-A SPRING	1	COPPER ALLOY 0.25T	
C	RING-B SPRING	1	COPPER ALLOY 0.20T	
B	EARTH SPRING		COPPER ALLOY 0.20T	
A	BODY	1	HIGH TEMP.THERMOPLASTIC UL 94V-0	BLACK

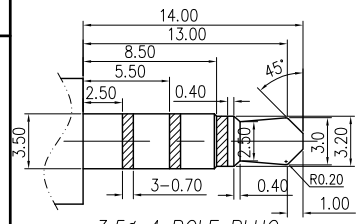

3.5ø 4 POLE PLUG

TOLERANCE: ±0.05

SCHEMATIC

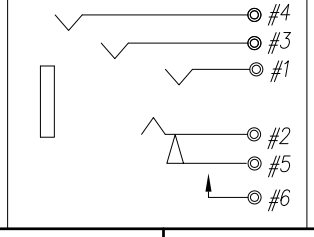

SCHEMATIC (PLUG IN)

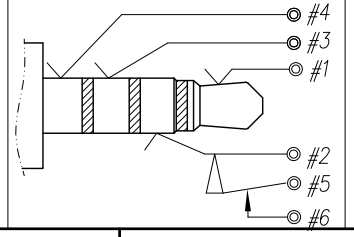

UNLESS OTHERWISE SPECIFED TOLERANCES

DECIMALS: X : ±0.5, X.X : ±0.3, X.XX : ±0.2

ANGLES: X : ±2°, X.X : ±1°

Singatron Enterprise Co., Ltd.
信音企業股份有限公司

TITLE	3.5ø PHONE JACK			
DWN	MARS	PART NO. 2SJ3052-008111F		
CHKD	BRUCE	SCALE 3:1	UNIT: mm	
APVD	LUSSEN	SIZE: A3	SHEET:1 OF 1	REV: B

CUSTOMER COPY

文件編號 PD-06-043-A