REV.	ECN NO OR DESCRIPTION	REVISED	DATE
A	PDR NO: T140901-2A	ROBIN	2015.01.20

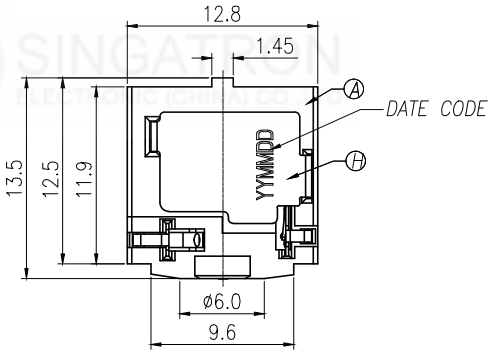

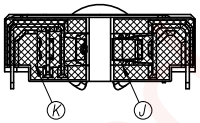

A VIEW

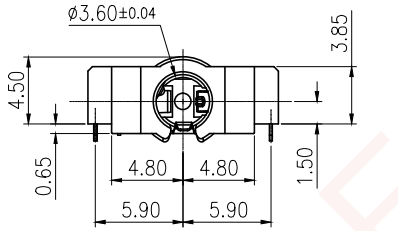

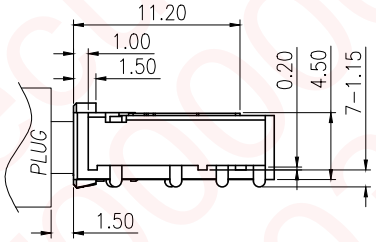

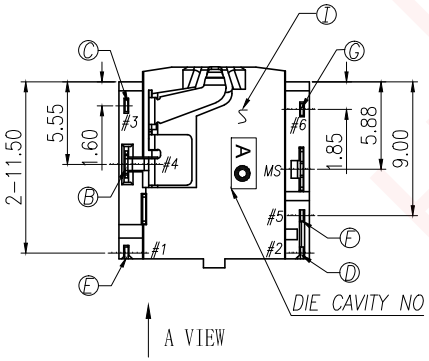

A VIEW

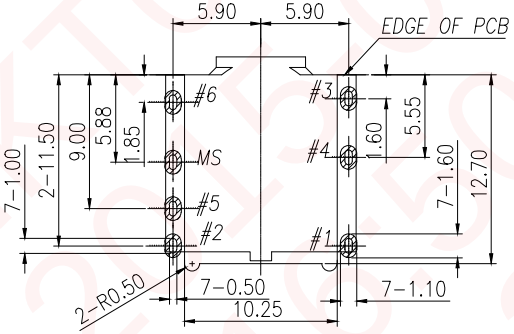

RECOMMENDED P.C.B. LAYOUT T=1.20

TOP VIEW (TOLRANCE: ±0.05)

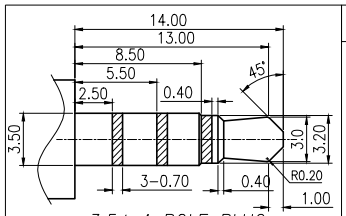

3.5ø 4 POLE PLUG

TOLERANCE:±0.05

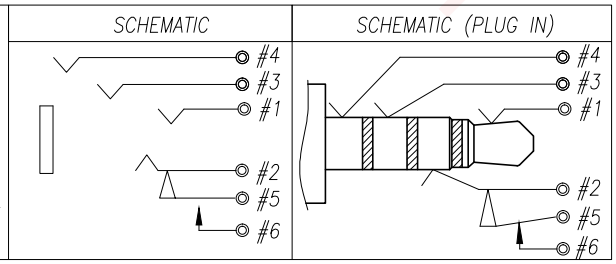

SPECIFICATIONS:

1. INSULATION RESISTANCE BETWEEN ANY ADJACENT OPEN CIRCUIT TERMINAL SHELL NOT BE LESS THAN 100MΩ MEASURED BY 500 VDC .
2. CONTACT RESISTANCE: 50mΩ MAX.
3. INSULATION VOLTAGE WITHSTAND:500V AC FOR ONE MINUTE.
4. UNLESS OTHERWISE SPECIFIED. TEST IS TO BE MADE AT 5-35°C IN TEMPERATURE AND 45-85% IN HUMIDITY. BUT,IF ANY VAGUE DATA IS OCCURED ON TEST RESULT, ANOTHER TEST SHALL BE MADE AT 20°C±2°C IN TEMP., 60-70% IN HUMIDITY.
5. LIFE TEST: 5,000 CYCLES.
6. INSERTION FORCE: 0.3 - 3.0Kg.
7. WITHDRAWAL FORCE: 0.3 - 3.0Kg.
8. AFTER TEST, CONTACT RESISTANCE: 100mΩ MAX.
9. AFTER HUMIDITY TEST, INSULATION RESISTANCE: 50MΩ MIN.
10. MARKING: MARK" " ON TOP OF CONNECTOR.
11. PACKING : TAPE & REEL.
12. TO CONFORM TO SINGATRON HAZARDOUS SUBSTANCE FREE SPEC.
13. HALOGEN FREE PRODUCT IDENTIFICATION MARK ON JACK:
14. HALOGEN FREE PRODUCT IDENTIFICATION LABEL ON PACKAGING:

NO	DESCRIPTION	QTY	MATERIAL	PLATING & COLOR
K	Mylar-2	1	0.10T	YELLOW
J	Mylar-1	1	0.10T	YELLOW
I	SEPARATOR	1	LCP E130i+30%GF,UL94-V0	BLACK
H	SHELL	1	Phosphor Bronze 0.2T	MATTE Sn 120u" ON SOLDER AREA OVER Ni 50u" Min.
G	MAKE TERMINAL	1	Phosphor Bronze 0.2T	GOLD FLASH CONTACT AREA &SOLDER TAIL, OVER Ni 50u" Min.
F	TRANSFER TERMINAL	1	Phosphor Bronze 0.2T	GOLD FLASH CONTACT AREA MATTE Sn 120u" ON SOLDER AREA ALL OVER Ni 50u" Min.
E	TIP SPRING	1	Phosphor Bronze 0.2T	
D	RING-A SPRING	1	Phosphor Bronze 0.2T	
C	RING-B SPRING	1	Phosphor Bronze 0.2T	
B	EARTH SPRING	1	Phosphor Bronze 0.2T	
A	BODY	1	PA4T+30%GF(TX1), UL 94V-0	BLACK

UNLESS OTHERWISE SPECIFED TOLERANCES

DECIMALS: X :±0.5, X.X :±0.3, X.X.X :±0.2

ANGLES: X :±2°, X.X :±1°

Singatron Enterprise Co., Ltd.
信音企業股份有限公司

TITLE	ø3.50 AUDIO JACK			
DWN	ROBIN	PART NO. 2SJ3052-017111F		
CHKD	BRUCE	SCALE 1:1	UNIT: mm	
APVD	LUSSEN	SIZE: A3	SHEET: 10F1	REV: A

CUSTOMER COPY

文件編號 RD-06-043-A