REV.	ECN NO OR DESCRIPTION	REVISED	DATE
A	PDR NO:120209-A	Aaron	2012.05.21
B	ECN NO:120628	Angus	2012.09.12
C	ECN NO:120823	Angus	2012.10.12

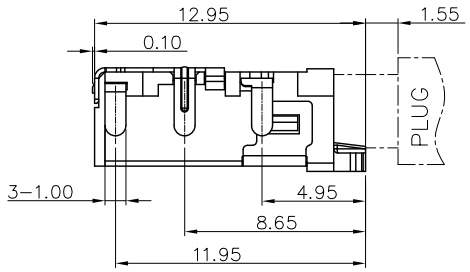

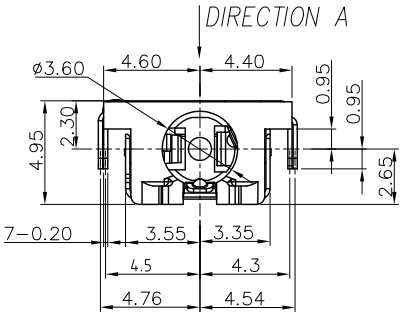

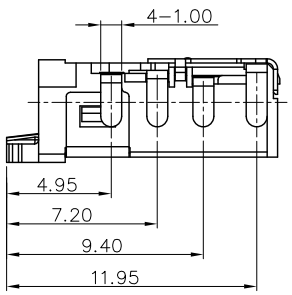

SPECIFICATIONS:

1. INSULATION RESISTANCE BETWEEN ANY ADJACENT OPEN CIRCUIT TERMINAL SHELL NOT BE LESS THAN 100MΩ MEASURED BY 500 VDC MEGGER.
2. CONTACT RESISTANCE: 50mΩ MAX.
3. INSULATION VOLTAGE WITHSTAND:500V AC FOR ONE MINUTE.
4. UNLESS OTHERWISE SPECIFIED. TEST IS TO BE MADE AT 5-35°C IN TEMPERATURE AND 45-85% IN HUMIDITY. BUT,IF ANY VAGUE DATA IS OCCURED ON TEST RESULT, ANOTHER TEST SHALL BE MADE AT 20°C±2°C IN TEMP., 60-70% IN HUMIDITY.
5. LIFE TEST: 5,000 CYCLES MIN.
6. INSERTION FORCE: 0.3 - 3Kgf.
7. WITHDRAWAL FORCE: 0.3 - 2Kgf.
8. AFTER LIFE TEST, CONTACT RESISTANCE: 60mΩ MAX.
9. AFTER HUMIDITY TEST, INSULATION RESISTANCE: 50MΩ MIN.
10. MARKING: MARK" " ON TOP OF CONNECTOR.
11. PACKIAGNG : TAPE & REEL.
12. TO CONFORM TO SINGATRON HAZARDOUS SUBSTANCE FREE SPEC.
13. GREEN PRODUCT IDENTIFICATION MARK ON JACK:
14. GREEN PRODUCT IDENTIFICATION LABEL ON PACKAGING:

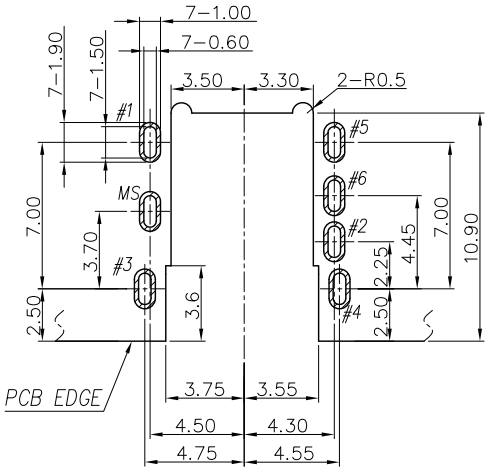

RECOMMENDED PCB LAYOUT

TOP VIEW TOL.±0.05

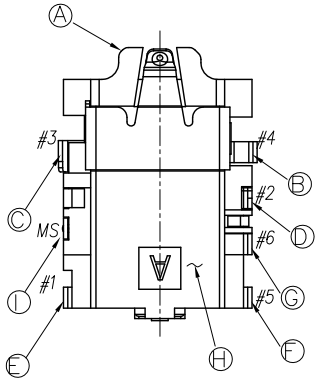

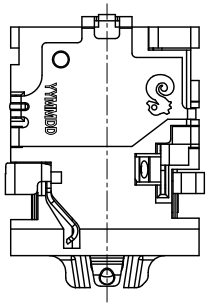

DIRECTION A

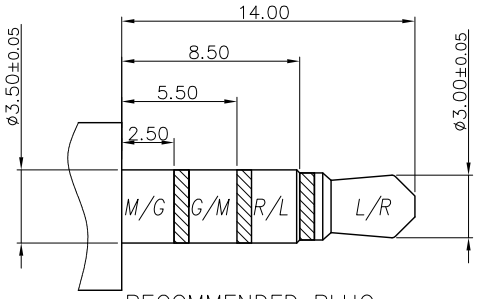

RECOMMENDED PLUG

ø3.5 4-POLE STANDARD PLUG

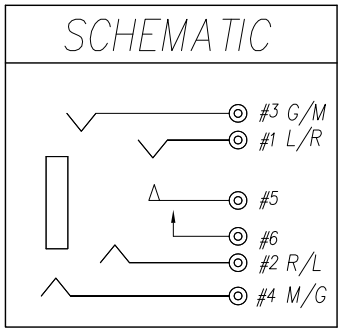

NO	DESCRIPTION	QTY	MATERIAL	PLATING & COLOR
I	SHELL	1	STAINLESS STEEL 0.2t	Ni 60u"Min.
H	SEPARATOR	1	HIGH TEMP.THERMOPLASTIC UL 94V-0	BLACK
G	MAKE TERMINAL	1	PHOSPHOR BRONZE 0.2t	GOLD FLASH ON CONTACT AREA GOLD FLASH ON SOLDER AREA ALL OVER 50u" Ni.
F	TRANSFER TERMINAL	1	PHOSPHOR BRONZE 0.2t	
E	TIP SPRING	1	PHOSPHOR BRONZE 0.2t	
D	RING A	1	PHOSPHOR BRONZE 0.2t	
C	RING B	1	PHOSPHOR BRONZE 0.2t	
B	EARTH	1	PHOSPHOR BRONZE 0.2t	GOLD FLASH ON CONTACT AREA ALL OVER 60u" Ni Min.(可焊接)
A	BODY	1	HIGH TEMP.THERMOPLASTIC UL 94V-0	BLACK

UNLESS OTHERWISE SPECIFED TOLERANCES

DECIMALS: X :±0.5 X.X :±0.3 X.XX :±0.2

ANGLES: X :±2° X.X :±1°

Singatron Enterprise Co., Ltd.
信音企業股份有限公司

TITLE	3.5ø PHONE JACK		
DWN	Angus	PART NO.2SJ3061-012111F	
CHKD	Tom	SCALE 1:1	UNIT: mm
APVD	Quan	SIZE: A3	SHEET:1 OF 1 REV: C

CUSTOMER COPY

文件編號RD-06-043-A