REV.	ECN NO OR DESCRIPTION	REVISED	DATE
A	PDR NO:T131118-5A	MARS	2014.01.02

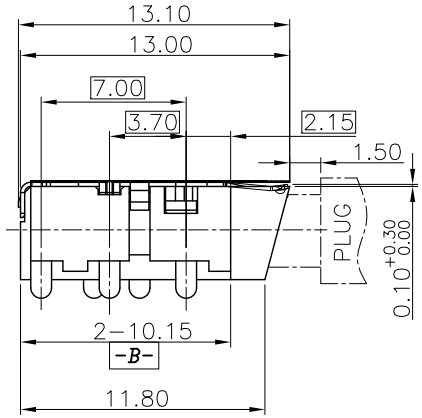

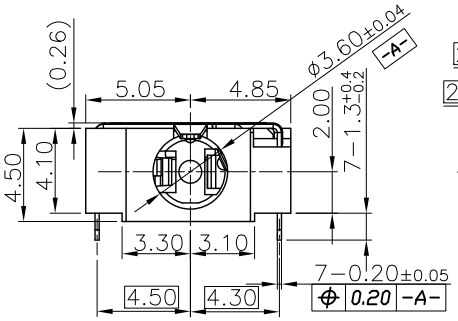

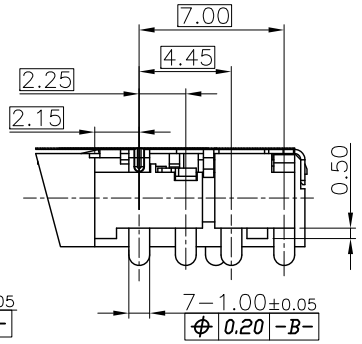

SPECIFICATIONS:

1. INSULATION RESISTANCE BETWEEN ANY ADJACENT OPEN CIRCUIT TERMINAL SHELL NOT BE LESS THAN 100MΩ. MEASURED BY 500V DC
2. CONTACT RESISTANCE: 50mΩ MAX.
3. IN SULATION VOLTAGE WITHSTAND:500V AC FOR ONE MINUTE.
4. UNLESS OTHERWISE SPECIFIED. TEST IS TO BE MADE AT 5-35°C IN TEMPERATURE AND 45-85% IN HUMIDITY. BUT,IF ANY VAGUE DATA IS OCCURED ON TEST RESULT, ANOTHER TEST SHALL BE MADE AT 20°C±2°C IN TEMP., 60-70% IN HUMIDITY.
5. LIFE TEST: 5,000 CYCLES
6. INSERTION FORCE: 0.3 - 3.0Kg.
7. WITHDRAWAL FORCE: 0.3 - 3.0Kg.
8. AFTER LIFE TEST, CONTACT RESISTANCE: 60mΩ MAX.
9. AFTER HUMIDITY TEST, INSULATION RESISTANCE: 50MΩ MIN.
10. MARKING: MARK" " ON TOP OF CONNECTOR.
11. PACKAGING : TAPE & REEL.
12. TO CONFORM TO SINGATRON HAZARDOUS SUBSTANCE FREE SPEC.
13. HALOGEN FREE PRODUCT IDENTIFICATION MARK ON PRODUCT:
14. HALOGEN FREE PRODUCT IDENTIFICATION LOGO ON PACKAGING:

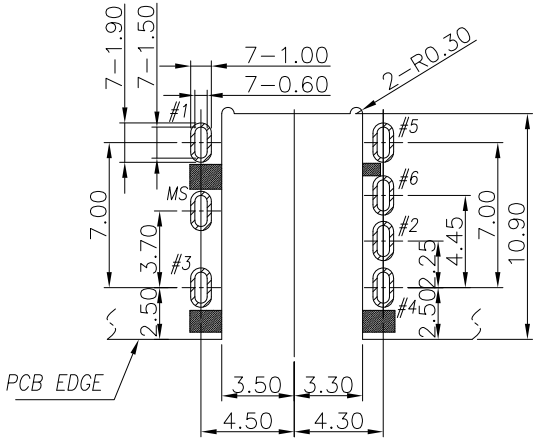

RECOMMENDED PCB LAYOUT

TOP VIEW (TOLERANCE:±0.05)

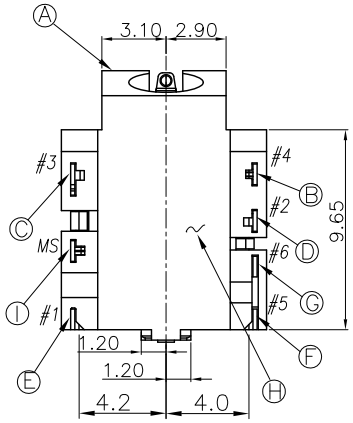

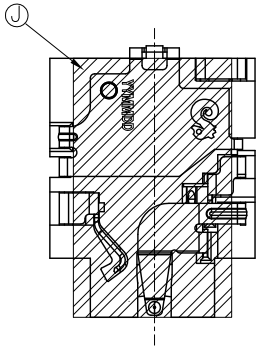

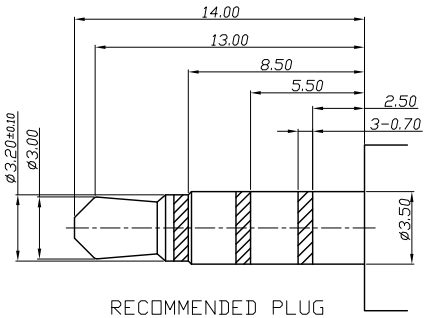

RECOMMENDED PLUG

4-POLE(±0.05)

SCHEMATIC

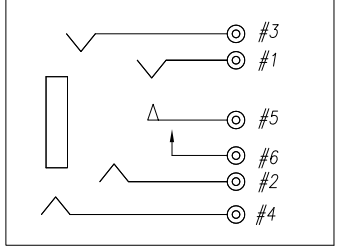

STAND OFF AREA

NO	DESCRIPTION	QTY	MATERIAL	PLATING & COLOR
J	MYALR	1	T=0.06	BLACK
I	SHELL	1	COPPER ALLOY,0.2t	Ni 60u"Min.
H	SEPARATOR	1	HIGH TEMP.THERMOPLASTIC UL 94V-0	BLACK
G	MAKE TERMINAL	1	COPPER ALLOY, 0.2t	GOLD FLASH ON CONTACT AND SOLDER AREA, ALL OVER NI 50u" MIN.
F	TRANSFER TERMINAL	1	COPPER ALLOY, 0.2t	
E	TIP SPRING	1	COPPER ALLOY, 0.2t	
D	RING-A	1	COPPER ALLOY, 0.2t	
C	RING-B	1	COPPER ALLOY, 0.2t	
B	EARTH	1	COPPER ALLOY, 0.2t	
A	BODY	1	HIGH TEMP.THERMOPLASTIC UL 94V-0	BLACK

UNLESS OTHERWISE SPECIFED TOLERANCES

DECIMALS: X :±0.5, X.X :±0.3, X.XX :±0.2

ANGLES: X :±2°, X.X :±1°

Singatron Enterprise Co., Ltd.
信音企業股份有限公司

TITLE	3.5ø PHONE JACK			
DWN	MARS	PART NO.2SJ3061-040111F		
CHKD	BRUCE	SCALE 1:1	UNIT: mm	
APVD	LUSSEN	SIZE: A3	SHEET:1 OF 1	REV:A

CUSTOMER COPY

文件編號 RD-06-043-A