REV.	ECN NO OR DESCRIPTION	REVISED	DATE
A	PDR NO: T120913-3A	Dengfeng	2013.08.06

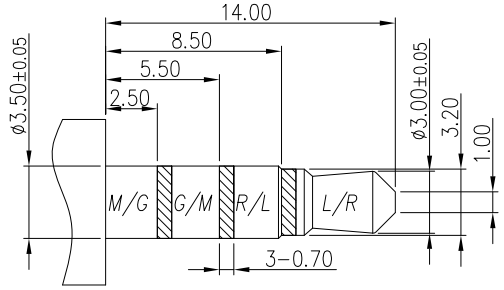

RECOMMENDED PLUG(TOL.±0.05)

ø3.5 4-POLE PLUG

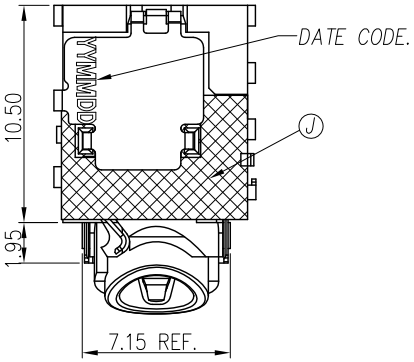

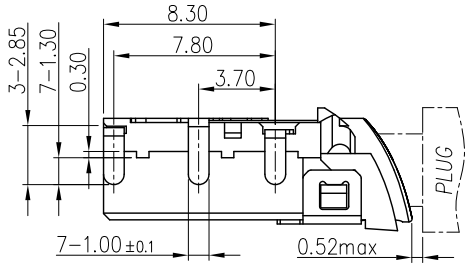

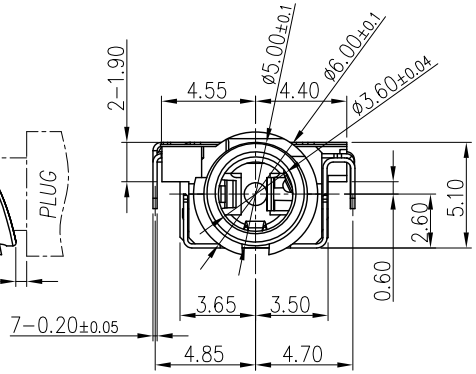

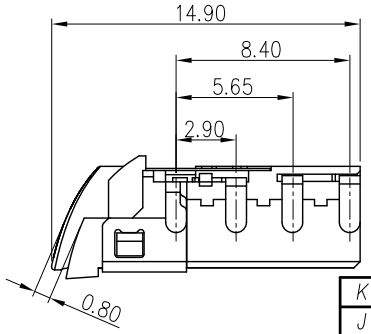

SPECIFICATIONS:

1. INSULATION RESISTANCE BETWEEN ANY ADJACENT OPEN CIRCUIT TERMINAL SHELL NOT BE LESS THAN 100MΩ MEASURED BY 500 VDC.
2. CONTACT RESISTANCE: 50mΩ MAX(INITIAL).
3. INSULATION VOLTAGE WITHSTAND: 500V AC FOR ONE MINUTE.
4. UNLESS OTHERWISE SPECIFIED. TEST IS TO BE MADE AT 5-35℃ IN TEMPERATURE AND 45-85% IN HUMIDITY. BUT,IF ANY VAGUE DATA IS OCCURED ON TEST RESULT, ANOTHER TEST SHALL BE MADE AT 20℃±2℃ IN TEMP., 60-70% IN HUMIDITY.
5. LIFE TEST: 5,000 CYCLES MIN.
6. INSERTION FORCE: 0.3 - 3Kg.
7. WITHDRAWAL FORCE: 0.3 - 3Kg.
8. AFTER LIFE TEST, CONTACT RESISTANCE: 100mΩ MAX.
9. AFTER HUMIDITY TEST, INSULATION RESISTANCE: 50MΩ MIN.
10. MARKING: MARK" " ON TOP OF CONNECTOR.
11. PACKING : TAPE & REEL.
12. TO CONFORM TO SINGATRON HAZARDOUS SUBSTANCE FREE SPEC.
13. HALOGEN FREE PRODUCT IDENTIFICATION MARK ON PRODUCT:
14. HALOGEN FREE PRODUCT IDENTIFICATION LOGO ON PACKAGING:

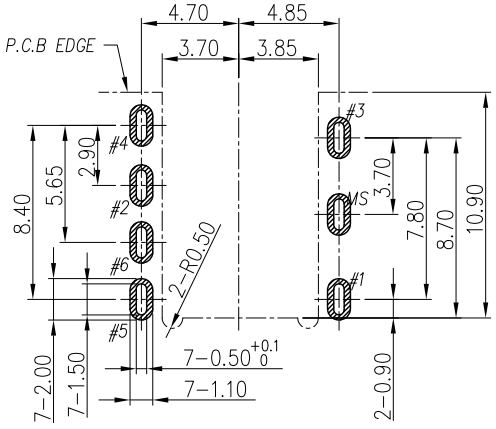

RECOMMENDED PCB LAYOUT

TOP VIEW ; TOL.±0.05

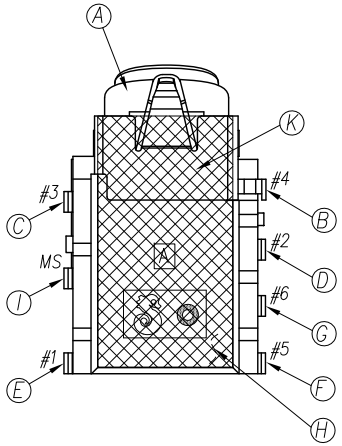

SCHEMATIC

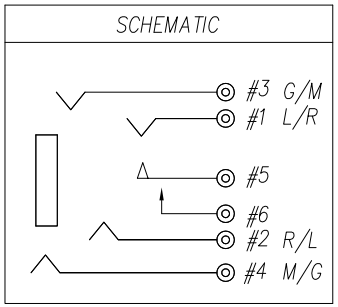

NO	DESCRIPTION	QTY	MATERIAL	PLATING & COLOR
K	MYLAR	1	0.06t	YELLOW
J	MYLAR	1	0.06t	YELLOW
I	SHELL	1	BRASS 0.2t	Ni 60u"Min.
H	SEPARATOR	1	HIGH TEMP.THERMOPLASTIC UL 94V-0	BLACK
G	MAKE TERMINAL	1	PHOSPHOR BRONZE 0.2t	GOLD FLASH ON CONTACT AREA; GOLD FLASH ON SOLDER AREA; ALL OVER 50u" Ni.
F	TRANSFER TERMINAL	1	PHOSPHOR BRONZE 0.2t	GOLD FLASH ON CONTACT AREA; MATTE Sn 80u" ON SOLDER AREA; ALL OVER 50u" Ni.
E	TIP SPRING	1	PHOSPHOR BRONZE 0.2t	
D	RING A	1	PHOSPHOR BRONZE 0.2t	
C	RING B	1	PHOSPHOR BRONZE 0.2t	
B	EARTH	1	PHOSPHOR BRONZE 0.2t	GOLD FLASH ON CONTACT AREA; OVER 50u" Ni.
A	BODY	1	HIGH TEMP.THERMOPLASTIC UL 94V-0	BLACK

UNLESS OTHERWISE SPECIFED TOLERANCES

DECIMALS: X :±0.5 X.X :±0.3 X.XX :±0.2

ANGLES: X :±2° X.X :±1°

Singatron Enterprise Co., Ltd.
信音企業股份有限公司

TITLE	3.5ø PHONE JACK			
DWN	Dengfeng	PART NO. 2SJ3080-009111F		
CHKD	Bruce	SCALE 4:1	UNIT: mm	
APVD	Lussen	SIZE: A3	SHEET: 1 OF 1	REV:A

CUSTOMER COPY

文件編號:RD-06-043-A