REV.	ECN NO OR DESCRIPTION	REVISED	DATE
A	PDR NO: T120911-4A	Bruce	2013.06.30
B	ECN NO: S131140 B	Bruce	2013.11.10

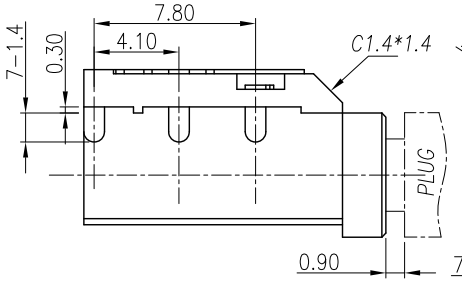

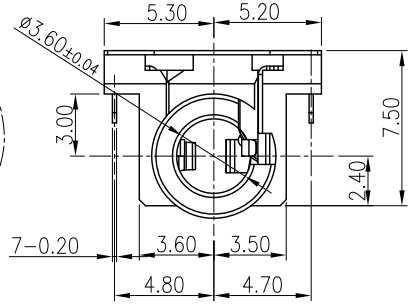

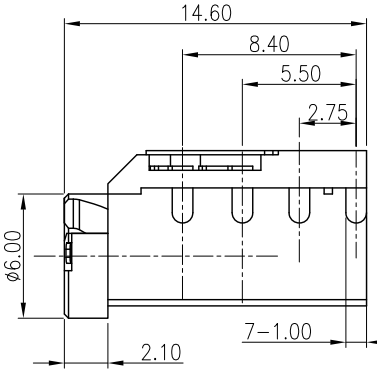

SPECIFICATIONS:

1. INSULATION RESISTANCE BETWEEN ANY ADJACENT OPEN CIRCUIT TERMINAL SHELL NOT BE LESS THAN 100MΩ MEASURED BY 500 VDC MEGGER.
2. CONTACT RESISTANCE: 50mΩ MAX(INITIAL).
3. INSULATION VOLTAGE WITHSTAND:500V AC FOR ONE MINUTE.
4. LIFE TEST: 5,000 CYCLES MIN.
5. INSERTION FORCE: 0.3-3.0Kgf ,
6. WITHDRAWAL FORCE: 0.3-3.0 Kgf,
7. AFTER LIFE TEST, CONTACT RESISTANCE: 100mΩ MAX.
8. AFTER HUMIDITY TEST, INSULATION RESISTANCE: 50MΩ MIN.
9. MARKING: MARK" " ON TOP OF CONNECTOR.
10. PACKAGING : TAPE & REEL.
11. TO CONFORM TO SINGATRON HAZARDOUS SUBSTANCE FREE SPEC.
12. HALOGEN FREE PRODUCT IDENTIFICATION MARK ON PRODUCT:
13. HALOGEN FREE PRODUCT IDENTIFICATION LOGO ON PACKAGING:

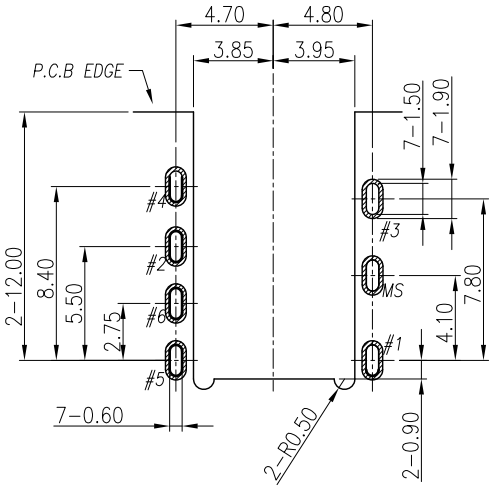

RECOMMENDED PCB LAYOUT

TOP VIEW ; TOL.±0.05

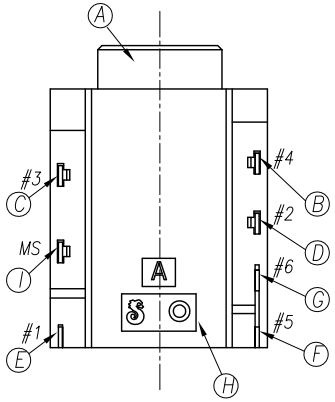

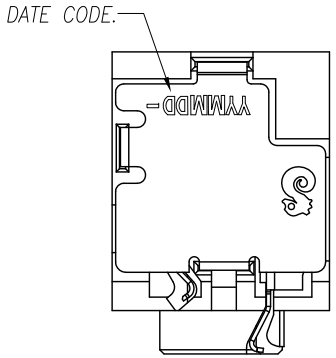

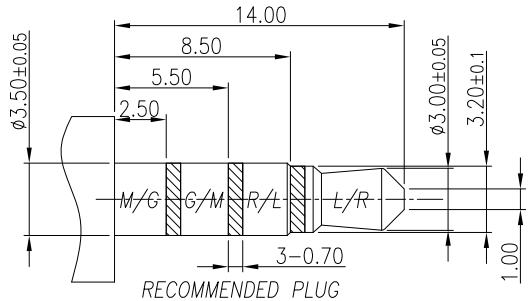

RECOMMENDED PLUG

Ø3.5 4-POLE STANDARD PLUG

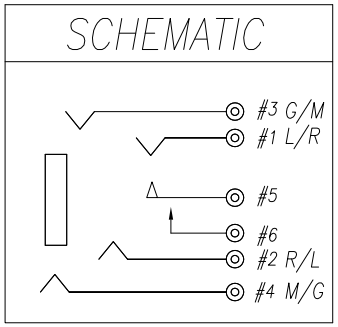

NO	DESCRIPTION	QTY	MATERIAL	PLATING & COLOR
I	SHELL	1	BRASS 0.2t	Ni 60u"Min.
H	SEPARATOR	1	HIGH TEMP.THERMOPLASTIC UL 94V-0	BLACK
G	MAKE TERMINAL	1	PHOSPHOR BRONZE 0.2t	GOLD FLASH ON CONTACT AREA; GOLD FLASH ON SOLDER AREA; ALL OVER 50u" Ni.
F	TRANSFER TERMINAL	1	PHOSPHOR BRONZE 0.2t	B GOLD FLASH ON CONTACT AREA; Matte Sn80u" ON SOLDER AREA; ALL OVER 50u" Ni.
E	TIP SPRING	1	PHOSPHOR BRONZE 0.2t	
D	RING A	1	PHOSPHOR BRONZE 0.2t	
C	RING B	1	PHOSPHOR BRONZE 0.2t	
B	EARTH	1	PHOSPHOR BRONZE 0.2t	
A	BODY	1	HIGH TEMP.THERMOPLASTIC UL 94V-0	BLACK

UNLESS OTHERWISE SPECIFED TOLERANCES

DECIMALS: X :±0.5, X.X :±0.3, X.XX :±0.2

ANGLES: X :±2°, X.X :±1°

Singatron Enterprise Co., Ltd.
信音企業股份有限公司

TITLE	3.5ø PHONE JACK			
DWN	Bruce	PART NO. 2SJ3080-014111F		
CHKD	Sky	SCALE 4:1	UNIT: mm	
APVD	Lussen	SIZE: A3	SHEET:1 OF 1	REV: B

CUSTOMER COPY

文件編號 RD-06-043-A