REV.	ECN NO OR DESCRIPTION	REVISED	DATE
A	PDR NO: T120905-3A	Owen	2013.02.28
B	ECN NO:S130956	YUREN	2014.02.24
C	ECN NO:S131027	ANDY	2014.04.04

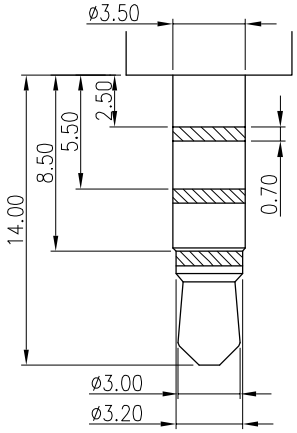

RECOMMENDED PLUG(±0.05)

ø3.5 4-POLE STANDARD PLUG

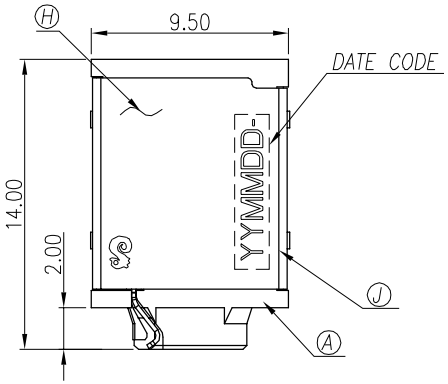

SPECIFICATIONS:

1. ELECTRICAL CHARACTERISTICS:
   1-1. RATING: 12V 1A
   1-2. CONTACT RESISTANCE: 30mΩ MAX.(INITIAL)
   1-3. DIELECTRIC WITHSTANDING VOLTAGE: 500V AC FOR ONE MINUTE
   1-4. INSULATION RESISTANCE: 100MΩ MIN. MEASURED BY 500 VDC
2. MECHANICAL CHARACTERISTICS:
   2-1. INSERTION FORCE : 0.3~3.0 KGF
   2-2. WITHDRAWAL FORCE : 0.3~3.0 KGF
3. LIFE TEST: 5,000 CYCLES MIN.
4. OTHER GENERAL SPEC. TO REFER "2SJ3082-007111F SERIES SPEC".
5. TO CONFORM TO SINGATRON HAZARDOUS SUBSTANCE FREE SPEC.
6. HALOGEN FREE PRODUCT IDENTIFICATION MARK ON JACK:
7. HALOGEN FREE PRODUCT IDENTIFICATION LABEL ON PACKAGING:
8. FOR REFLOW SOLDERING LEAD-FREE PROCESS.

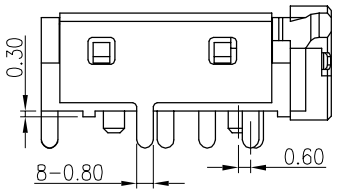

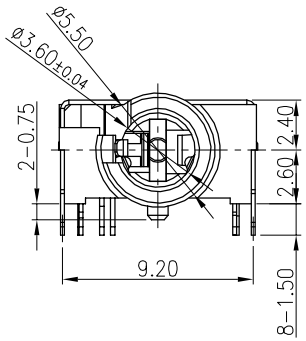

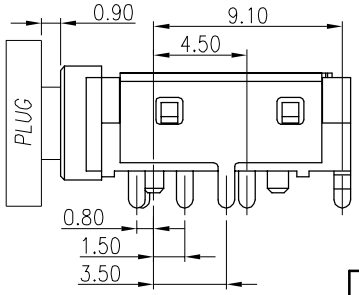

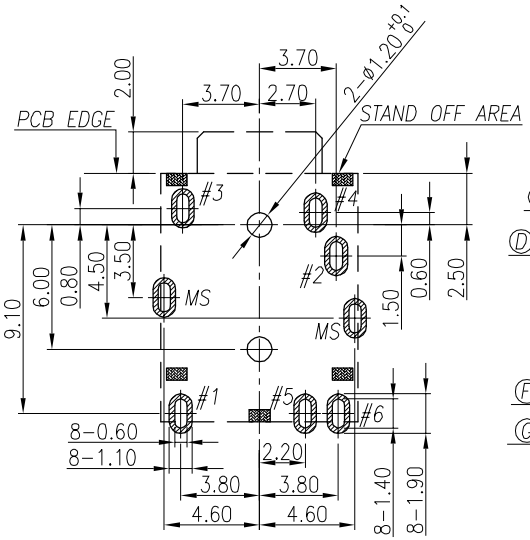

RECOMMENDED PCB LAYOUT(TOP VIEW)

(TOLERANCE: ±0.05)

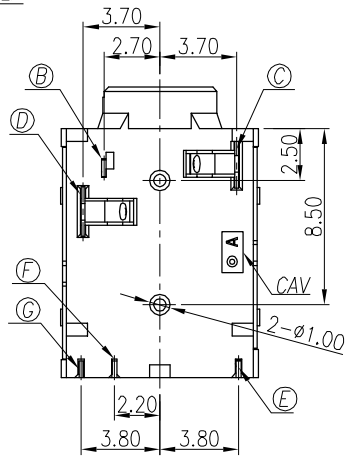

SCHEMATIC

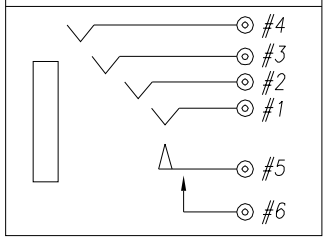

NO	DESCRIPTION	QTY	MATERIAL	PLATING & COLOR
J	SHELL	1	C5210-EH, 0.2t	NICKEL 60u" MIN. PLATING.
H	SEPERATE	1	LCP E130I	BLACK
G	MAKE TERMINAL	1	C5210-EH, 0.2t	GOLD FLASH ON CONTACT AREA, MATTE TIN 120u" ON SOLDER TAIL, ALL OVER NICKEL 50u" MIN. PLATING.
F	TRANSFER TERMINAL	1	C5210-EH, 0.2t	GOLD FLASH OVER NICKEL 50u"
E	TIP SPRING	1	C5210-EH, 0.25t	GOLD FLASH ON CONTACT AREA, MATTE TIN 120u" ON SOLDER TAIL, ALL OVER NICKEL 50u" MIN. PLATING.
D	RING-A	1	C5210-EH, 0.2t	
C	RING-B	1	C5210-EH, 0.2t	
B	EARTH	1	C5210-EH, 0.2t	
A	BODY	1	PA10T GF UL94-V0 (R630NH)	BLACK

UNLESS OTHERWISE SPECIFED TOLERANCES

DECIMALS: X :±0.5, X.X :±0.3, X.XX :±0.2

ANGLES: X :±2°, X.X :±1°

Singatron Enterprise Co., Ltd.
信音企業股份有限公司

TITLE	ø3.50 AUDIO JACK			
DWN	ANDY	PART NO.2SJ3082-007111F		
CHKD	CERRY	SCALE:1:1	UNIT: mm	
APVD	MAX	SIZE: A3	SHEET:1 OF 1	REV: C

CUSTOMER COPY

文件編號 RD-06-043-A