REV.	ECN NO OR DESCRIPTION	REVISED	DATE
A	PDR NO: T131111-2A	Bruce	2014.03.04
B	ECN NO: S161206-C B	JIE-FU	2017.01.16

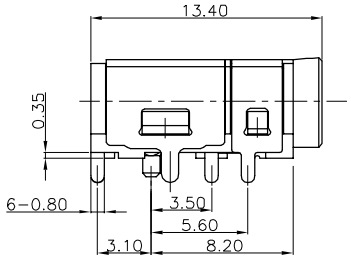

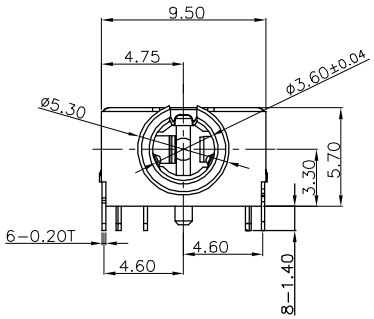

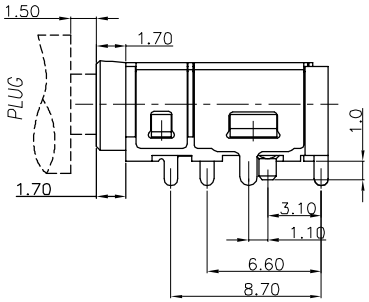

SPECIFICATIONS:

1. INSULATION RESISTANCE BETWEEN ANY ADJACENT OPEN CIRCUIT TERMINAL SHELL NOT BE LESS THAN 100MΩ MEASURED BY 500 VDC .
2. CONTACT RESISTANCE: 50mΩ MAX.
3. INSULATION VOLTAGE WITHSTAND:500V AC FOR ONE MINUTE.
4. UNLESS OTHERWISE SPECIFIED. TEST IS TO BE MADE AT 5-35°C IN TEMPERATURE AND 45-85% IN HUMIDITY. BUT,IF ANY VAGUE DATA IS OCCURED ON TEST RESULT, ANOTHER TEST SHALL BE MADE AT 20°C±2°C IN TEMP., 60-70% IN HUMIDITY.
5. LIFE TEST: 5,000 CYCLES.
6. INSERTION FORCE: 0.3 - 3.0Kg.
7. WITHDRAWAL FORCE: 0.3 - 3.0Kg.
8. AFTER LIFE TEST, CONTACT RESISTANCE: 120mΩ MAX.
9. AFTER HUMIDITY TEST, INSULATION RESISTANCE: 50MΩ MIN.
10. MARKING: MARK" " ON TOP OF CONNECTOR.
11. PACKING : TAPE & REEL.
12. TO CONFORM TO SINGATRON HAZARDOUS SUBSTANCE FREE SPEC.
13. HALOGEN FREE PRODUCT IDENTIFICATION MARK ON JACK:
14. HALOGEN FREE PRODUCT IDENTIFICATION LABEL ON PACKAGING:

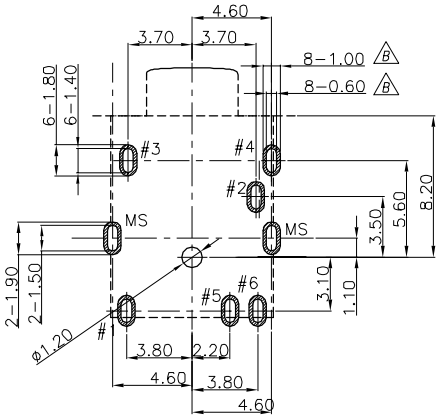

RECOMMENDED PCB LAYOUT(TOP VIEW)
(TOLERANCE: ±0.05)

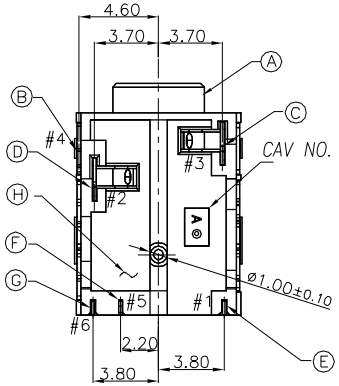

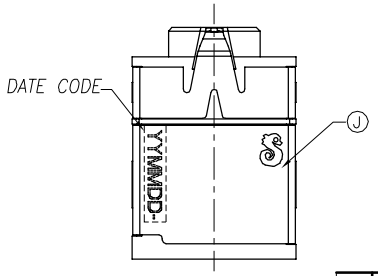

NO	DESCRIPTION	QTY	MATERIAL	PLATING & COLOR
J	SHELL	1	COPPER ALLOY, 0.2t	Ni 60u" MIN. PLATING.
H	SEPARATE	1	HIGH TEMP.THERMOPLASTIC UL 94V-0	BLACK
F	TRANSFER TERMINAL	1	COPPER ALLOY, 0.2t	GOLD FLASH ; Ni 50 u" Min.
G	MAKE TERMINAL	1	COPPER ALLOY, 0.2t	GOLD FLASH ON CONTACT AREA, MATTE Sn 80u" ON SOLDER TAIL, ALL OVER Ni 50u" MIN. PLATING.
E	TIP SPRING	1	COPPER ALLOY, 0.25t	
D	RING-A	1	COPPER ALLOY, 0.2t	
C	RING-B	1	COPPER ALLOY, 0.2t	
B	EARTH	1	COPPER ALLOY, 0.2t	
A	BODY	1	HIGH TEMP.THERMOPLASTIC UL 94V-0	BLACK

SCHEMATIC

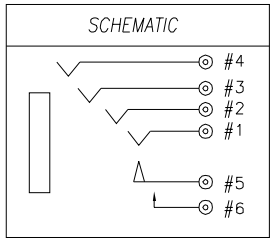

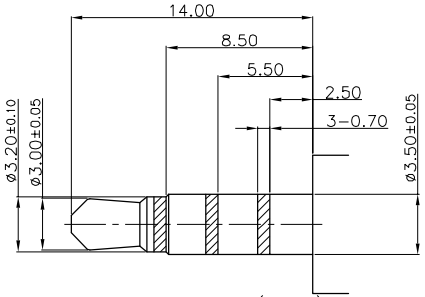

RECOMMENDED PLUG(±0.05)
ø3.5 4-POLE STANDARD PLUG

UNLESS OTHERWISE SPECIFED TOLERANCES

DECIMALS: X :±0.5, X.X :±0.3, X.XX :±0.2

ANGLES: X :±2°, X.X :±1°

Singatron Enterprise Co., Ltd.
信音企業股份有限公司

TITLE	ø3.50 AUDIO JACK			
DWN	JIE-FU	PART NO. 2SJ3088-003111F		
CHKD	CERRY	SCALE:4:1	UNIT: mm	
APVD	LUSSEN	SIZE: A3	SHEET:1 OF 1	REV: B

CUSTOMER COPY

文件編號: RD-06-043-A