REV.	ECN NO OR DESCRIPTION	REVISED	DATE
A	PDR NO: T170616-2A/2B	Peng	2018.08.06

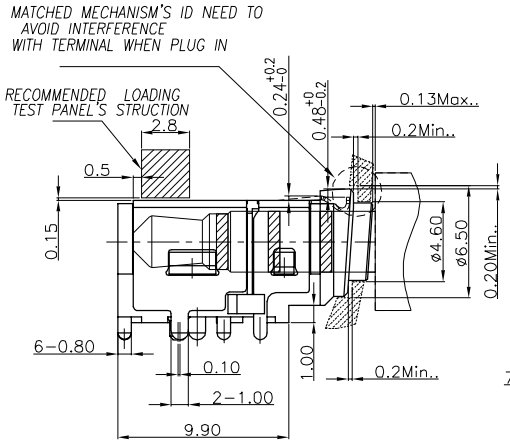

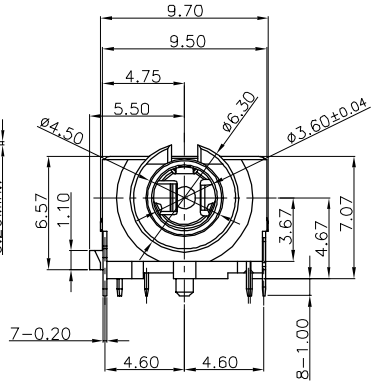

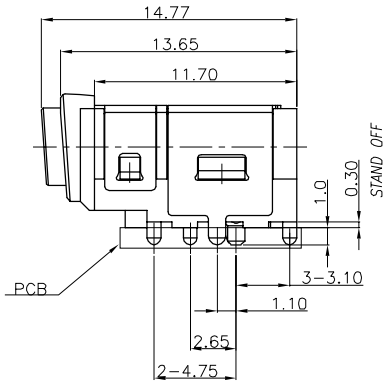

SPECIFICATIONS:

1. ELECTRICAL CHARACTERISTICS:
   1-1. RATING: 12V 1A
   1-2. CONTACT RESISTANCE: 50mΩ MAX.(INITIAL)
   1-3. DIELECTRIC WITHSTANDING VOLTAGE: 500V AC FOR ONE MINUTE.
   1-4. INSULATION RESISTANCE: 100MΩ MIN. MEASURED BY 500 VDC.
2. LIFE TEST: 2,000 CYCLES MIN.
   AFTER LIFE TEST, CONTACT RESISTANCE: 100mΩ MAX.
3. MECHANICAL CHARACTERISTICS:
   3-1. BEFORE LIFE TEST: INSERTION FORCE: 0.8-3.0 Kgf,
   EXTRACTION FORCE: 0.6-1.8 Kgf,
   3-2. AFTER LIFE TEST: INSERTION FORCE: 2.5 Kgf MAX,
   EXTRACTION FORCE: 0.5 Kgf MIN,
4. PACKAGING : TAPE & REEL.
5. AFTER HUMIDITY TEST, INSULATION RESISTANCE: 50MΩ MIN.
6. TO CONFORM TO SINGATRON HAZARDOUS SUBSTANCE FREE SPEC.
7. HALOGEN FREE PRODUCT IDENTIFICATION MARK ON PRODUCT:
8. HALOGEN FREE PRODUCT IDENTIFICATION LOGO ON PACKAGING:
9. FOR LEAD-FREE PROCESS.
10. PRINTED DATE CODE" YYMMDD- " ON TOP OF CONNECTOR.

SEE"Table"

2SJ3088-027111F	GOLD FLASH ON CONTACT AREA;
2SJ3088-027211F	Au 30u" ON CONTACT AREA;

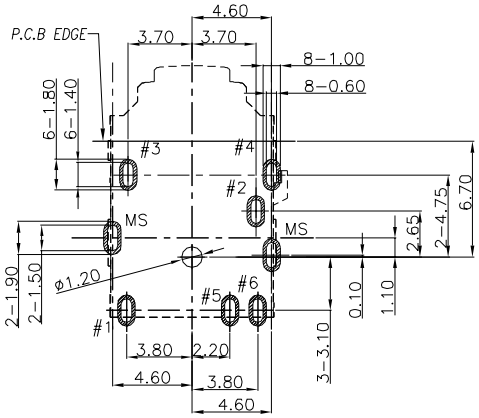

RECOMMENDED PCB LAYOUT(TOP VIEW)
(TOLERANCE: ±0.05)

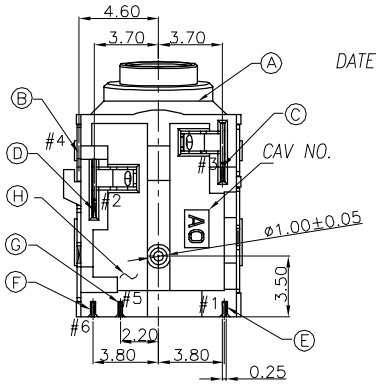

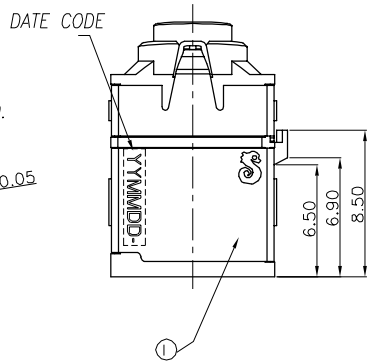

SCHEMATIC

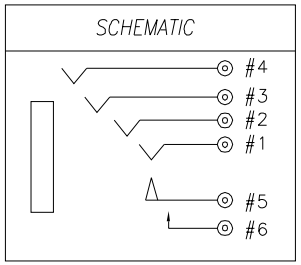

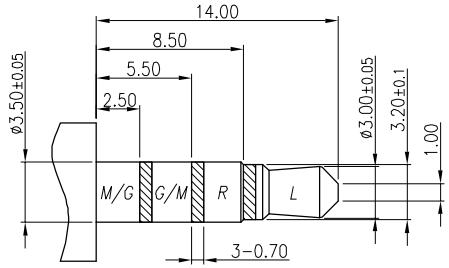

RECOMMENDED PLUG(±0.05)
ø3.5 4-POLE STANDARD PLUG

NO	DESCRIPTION	QTY	MATERIAL	PLATING & COLOR
I	SHELL	1	STAINLESS STEEL , 0.2t	Ni 60u" MIN. PLATING.
H	SEPARATE	1	HIGH TEMP.THERMOPLASTIC UL 94V-0	BLACK
G	TRANSFER TERMINAL	1	COPPER ALLOY, 0.2t	GOLD FLASH ON CONTACT AREA, GOLD FLASH ON SOLDER TAIL, ALL OVER Ni 50u" MIN. PLATING.
F	MAKE TERMINAL	1	COPPER ALLOY, 0.2t	GOLD FLASH ON CONTACT AREA, MATTE TIN 120u" ON SOLDER TAIL, ALL OVER Ni 50u" MIN. PLATING.
E	TIP SPRING	1	STAINLESS STEEL, 0.25t	SEE TABLE ON CONTACT AREA, MATTE TIN 120u" ON SOLDER TAIL, ALL OVER Ni 50u" MIN. PLATING.
D	RING-A	1	COPPER ALLOY, 0.2t	
C	RING-B	1	COPPER ALLOY, 0.2t	
B	EARTH	1	COPPER ALLOY, 0.2t	
A	BODY	1	HIGH TEMP.THERMOPLASTIC UL 94V-0	BLACK

UNLESS OTHERWISE SPECIFED TOLERANCES

Singatron Enterprise Co., Ltd.
信音企業股份有限公司

DECIMALS: X :±0.5, X.X :±0.3, X.XX :±0.2
ANGLES: X :±2°, X.X :±1°

TITLE	ø3.50 AUDIO JACK			
DWN	PENG	PART NO. 2SJ3088-027X11F		
CHKD	BRUCE	SCALE:4:1	UNIT: mm	
APVD	LIAO	SIZE: A3	SHEET:1 OF 1	REV: A

CUSTOMER COPY

文件編號: RD-06-043-A