REV.	ECN NO OR DESCRIPTION	REVISED	DATE
A	PDR NO.: T130924-9A	HM-JIANG	2014.06.03
B	ECN NO.: S140956	ANDY	2014.12.31

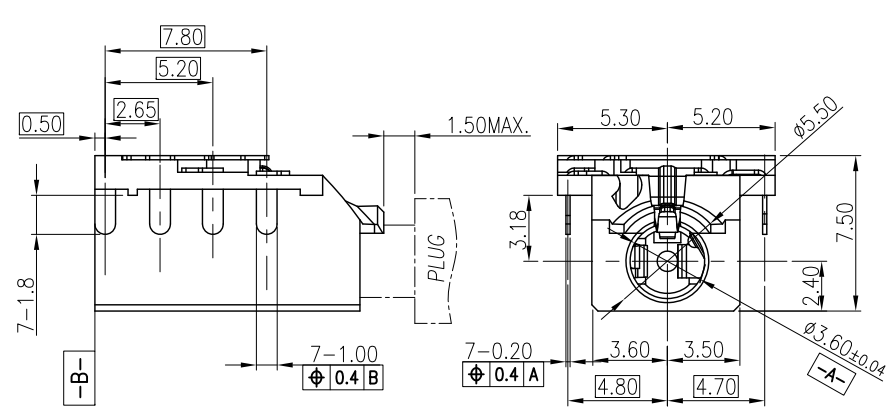

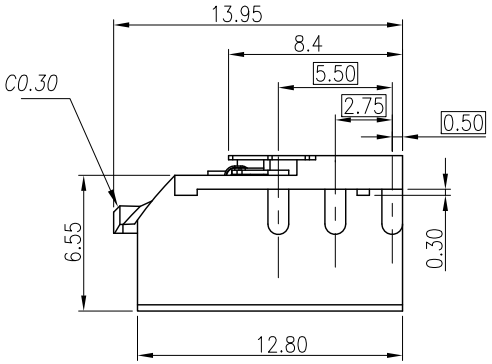

SPECIFICATIONS:

1. INSULATION RESISTANCE BETWEEN ANY ADJACENT OPEN CIRCUIT TERMINAL SHELL NOT BE LESS THAN 100MΩ MEASURED BY 500V DC .
2. CONTACT RESISTANCE: 50mΩ MAX(INITIAL).
3. INSULATION VOLTAGE WITHSTAND:500V AC FOR ONE MINUTE.
4. LIFE TEST: 5,000 CYCLES.
5. INSERTION FORCE: 0.5-3.0Kgf ,
6. WITHDRAWAL FORCE: 0.5-3.0 Kgf,
7. AFTER LIFE TEST, CONTACT RESISTANCE: 100mΩ MAX.
8. AFTER HUMIDITY TEST, INSULATION RESISTANCE: 50MΩ MIN.
9. MARKING: MARK" ON TOP OF CONNECTOR.
10. PACKING : TAPE & REEL.
11. TO CONFORM TO SINGATRON HAZARDOUS SUBSTANCE FREE SPEC.
12. HALOGEN FREE PRODUCT IDENTIFICATION MARK ON PRODUCT:
13. HALOGEN FREE PRODUCT IDENTIFICATION LOGO ON PACKAGING:

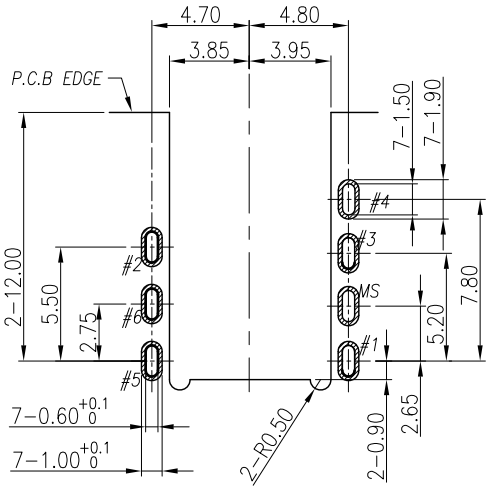

RECOMMENDED PCB LAYOUT

TOP VIEW ; TOL.±0.05

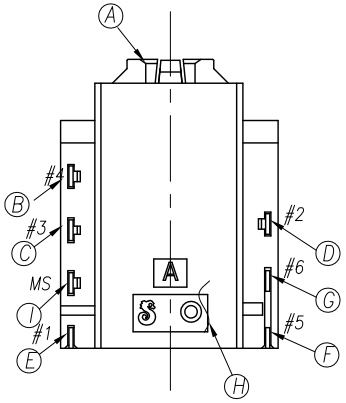

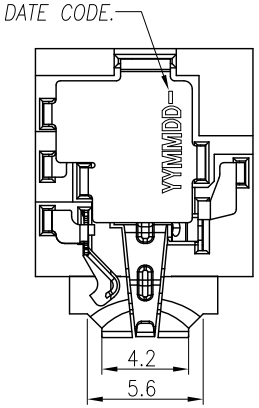

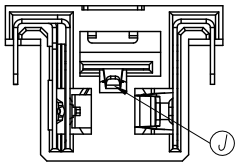

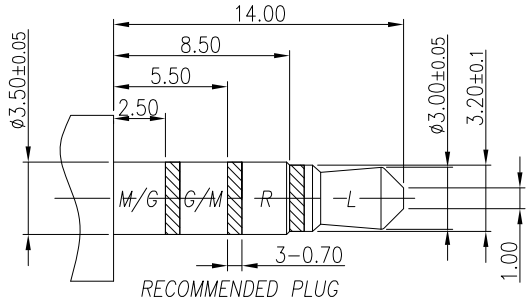

RECOMMENDED PLUG

ø3.5 4-POLE STANDARD PLUG

SCHEMATIC

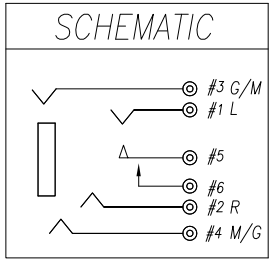

NO	DESCRIPTION	QTY	MATERIAL	PLATING & COLOR
J	DUMMY	1	STAINIESS STEEL,0.20T	Ni 60u"Min.
I	SHELL	1	COPPER ALLOY, 0.2t	Ni 60u"Min.
H	SEPARATOR	1	HIGH TEMP.THERMOPLASTIC UL 94V-0	BLACK
G	MAKE	1	COPPER ALLOY, 0.2t	GOLD FLASH ON CONTACT AREA; GOLD FLASH ON SOLDER AREA; ALL OVER 50u" Ni.
F	TRANSFER	1	COPPER ALLOY, 0.2t	GOLD FLASH ON CONTACT AREA; Matte Sn 80u" ON SOLDER AREA; ALL OVER 50u" Ni.
E	TIP	1	COPPER ALLOY, 0.2t	
D	RING-A	1	COPPER ALLOY, 0.2t	
C	EARTH	1	COPPER ALLOY, 0.2t	
B	RING-B	1	COPPER ALLOY, 0.2t	
A	BODY	1	HIGH TEMP.THERMOPLASTIC UL 94V-0	BLACK

UNLESS OTHERWISE SPECIFED TOLERANCES

DECIMALS: X :±0.5, X.X :±0.3, X.XX :±0.2

ANGLES: X :±2°, X.X :±1°

Singatron Enterprise Co., Ltd.
信音企業股份有限公司

TITLE	3.5ø PHONE JACK			
DWN	ANDY	PART NO. 2SJ3095-017111F		
CHKD	CERRY	SCALE 4:1	UNIT: mm	
APVD	LIAO	SIZE: A3	SHEET:1 OF 1	REV: B

CUSTOMER COPY

文件編號:RD-06-043-A