REV.	ECN NO OR DESCRIPTION	REVISED	DATE
A	PDR NO:T170829-2A/B	Peng	2018.11.28

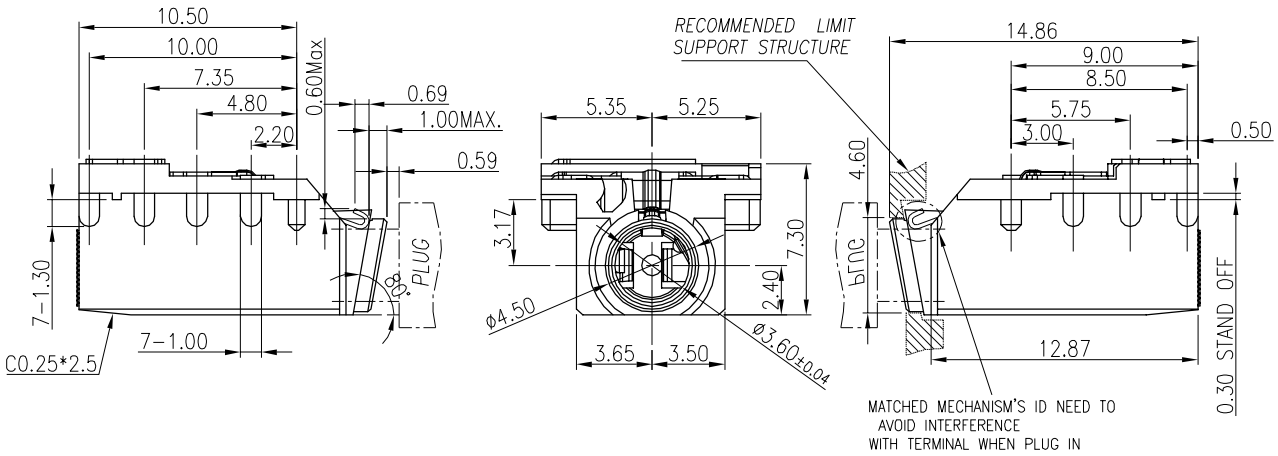

SPECIFICATIONS:

1. ELECTRICAL CHARACTERISTICS:
   1-1. RATING: 12V 1A
   1-2. CONTACT RESISTANCE: 50mΩ MAX.(INITIAL)
   1-3. DIELECTRIC WITHSTANDING VOLTAGE: 500V AC FOR ONE MINUTE.
   1-4. INSULATION RESISTANCE: 100MΩ MIN. MEASURED BY 500 VDC.
2. LIFE TEST: 2,000 CYCLES MIN.
   AFTER LIFE TEST, CONTACT RESISTANCE: 100mΩ MAX.
3. MECHANICAL CHARACTERISTICS:
   3-1. BEFORE LIFE TEST: INSERTION FORCE: 0.8-3.0 Kgf,
   EXTRACTION FORCE: 0.6-1.8 Kgf,
   3-2. AFTER LIFE TEST: INSERTION FORCE: 2.5 Kgf MAX,
   EXTRACTION FORCE: 0.5 Kgf MIN,
4. PACKAGING : TAPE & REEL.
5. AFTER HUMIDITY TEST, INSULATION RESISTANCE: 50MΩ MIN.
6. TO CONFORM TO SINGATRON HAZARDOUS SUBSTANCE FREE SPEC.
7. HALOGEN FREE PRODUCT IDENTIFICATION MARK ON PRODUCT:
8. HALOGEN FREE PRODUCT IDENTIFICATION LOGO ON PACKAGING:
9. FOR LEAD-FREE PROCESS.
10. PRINTED DATE CODE" YMD- " ON TOP OF CONNECTOR.

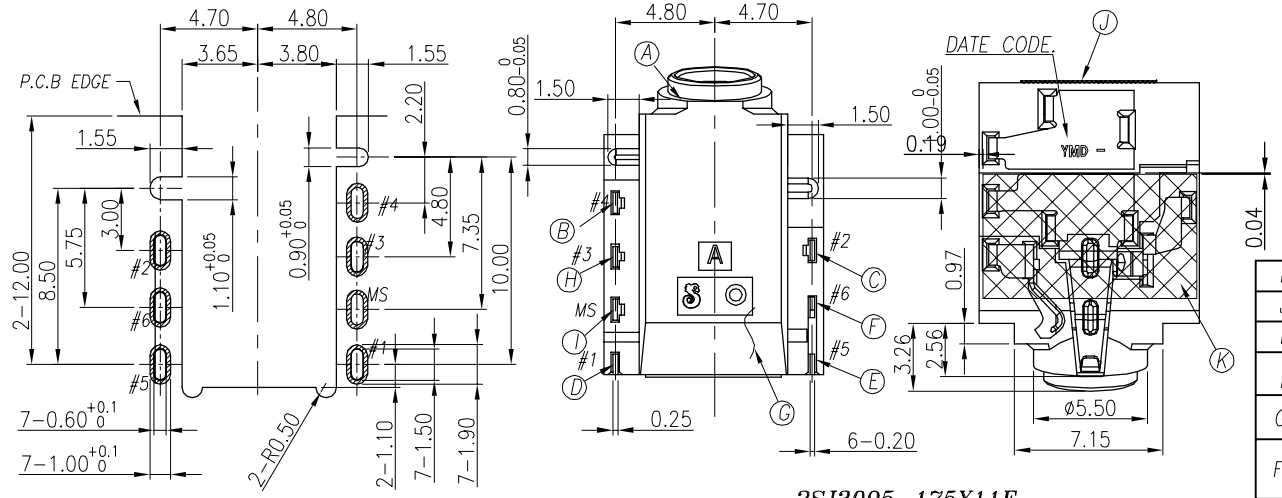

RECOMMENDED PCB LAYOUT

TOP VIEW ; TOL.±0.05

2SJ3095-175X11F

1:GOLD FLASH

2:Au 30u"

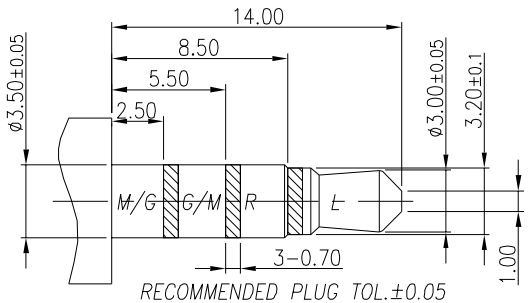

RECOMMENDED PLUG TOL.±0.05

ø3.5 4-POLE STANDARD PLUG

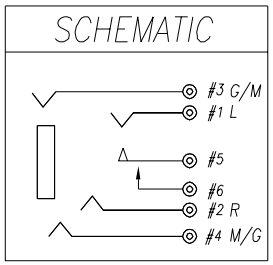

NO	DESCRIPTION	QTY	MATERIAL	PLATING & COLOR
K	MYLAR	1	KAPTON 0.06T	YELLOW
J	MYLAR	1	KAPTON 0.10T	BLACK
I	SHELL	1	COPPER ALLOY, 0.2T	Ni 60u"Min.
H	EARTH	1	COPPER ALLOY, 0.2T	G/F OR Au 30u" ON CONTACT AREA; All OVER Ni 60u"Min.
G	SEPARATOR	1	HIGH TEMP.THERMOPLASTIC UL 94V-0	BLACK
F	MAKE	1	COPPER ALLOY, 0.2T	GOLD FLASH ON CONTACT AREA; GOLD FLASH ON SOLDER AREA; ALL OVER 50u" Ni.
E	TRANSFER	1	COPPER ALLOY, 0.2T	GOLD FLASH ON CONTACT AREA; Matte Sn 80u" ON SOLDER AREA; ALL OVER 50u" Ni.
D	TIP	1	STAINLESS STEEL 0.25t	G/F OR Au 30u" ON CONTACT AREA; All OVER Ni 60u"Min.
C	RING-A	1	COPPER ALLOY, 0.2T	
B	RING-B	1	COPPER ALLOY, 0.2T	
A	BODY	1	HIGH TEMP.THERMOPLASTIC UL 94V-0	BLACK

UNLESS OTHERWISE SPECIFED TOLERANCES

DECIMALS: X :±0.5, X.X :±0.3, X.XX :±0.2

ANGLES: X :±2°, X.X :±1°

Singatron Enterprise Co., Ltd.
信音企業股份有限公司

TITLE	3.5ø AUDIO JACK			
DWN	Peng	PART NO. 2SJ3095-175X11F		
CHKD	BRUCE	SCALE 4:1	UNIT: mm	
APVD	LIAO	SIZE: A3	SHEET:1 OF 1	REV: A

CUSTOMER COPY

文件編號 RD-06-043-A