REV.	ECN NO OR DESCRIPTION	REVISED	DATE
A	PDR No. T171220-1A	Qing	2019.04.17

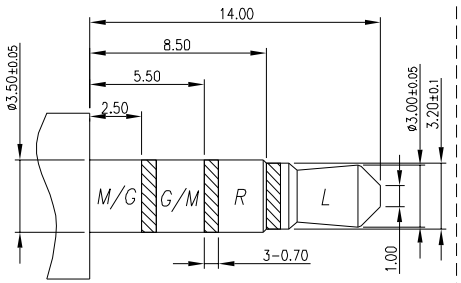

RECOMMENDED PLUG

ø3.5 4-POLE STANDARD PLUG

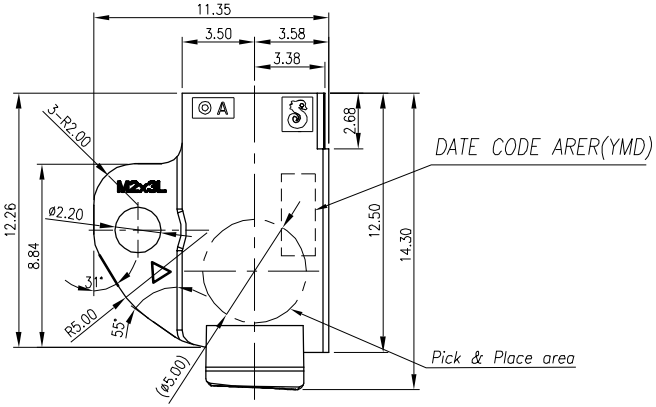

SPECIFICATIONS:

1. ELECTRICAL CHARACTERISTICS:
   1-1. RATING: 12V 1A
   1-2. CONTACT RESISTANCE: 50mΩ MAX.(INITIAL)
   1-3. DIELECTRIC WITHSTANDING VOLTAGE: 500V AC FOR ONE MINUTE.
   1-4. INSULATION RESISTANCE: 100MΩ MIN. MEASURED BY 500 VDC.
2. MECHANICAL CHARACTERISTICS:
   2-1. INSERTION FORCE : 0.3~3.0 KGF
   2-2. WITHDRAWAL FORCE : 0.3~3.0 KGF
3. LIFE TEST: 5,000 CYCLES MIN.
4. PACKAGING : TAPE & REEL.
5. AFTER HUMIDITY TEST, INSULATION RESISTANCE: 50MΩ MIN.
6. TO CONFORM TO SINGATRON HAZARDOUS SUBSTANCE FREE SPEC.
7'. HALOGEN FREE PRODUCT IDENTIFICATION MARK ON PRODUCT:
8. HALOGEN FREE PRODUCT IDENTIFICATION LOGO ON PACKAGING:
9. PLEASE PUT THE PRODUCT IN A CONDITION WHERE IS FULL OF NITROGEN WHEN PASS THE IR REFLOW
10. PRINTED DATE CODE" YMD= " ON TOP OF CONNECTOR.

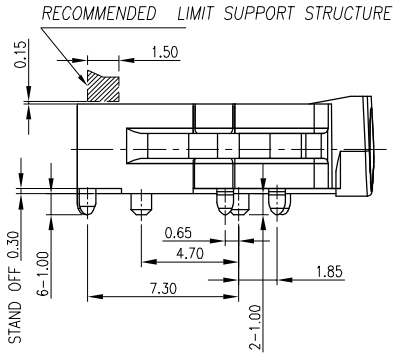

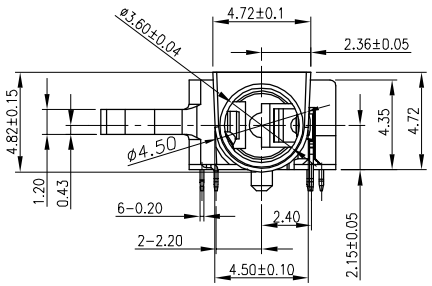

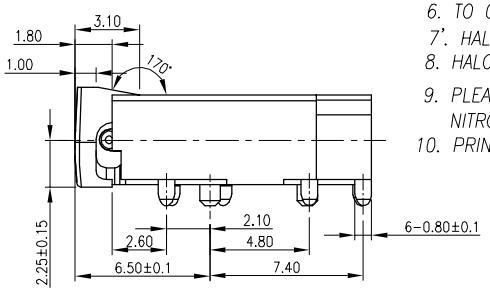

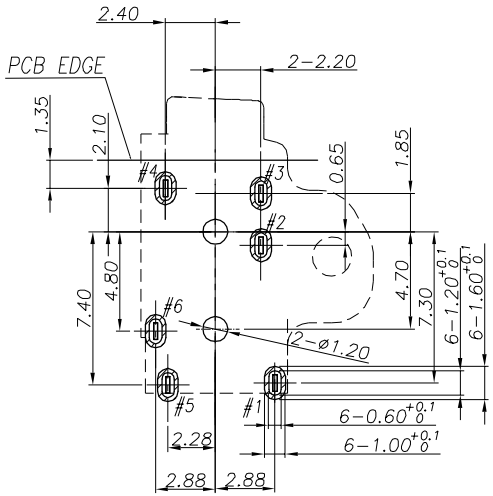

RECOMMENDED PCB LAYOUT

TOP VIEW ; TOL.±0.05

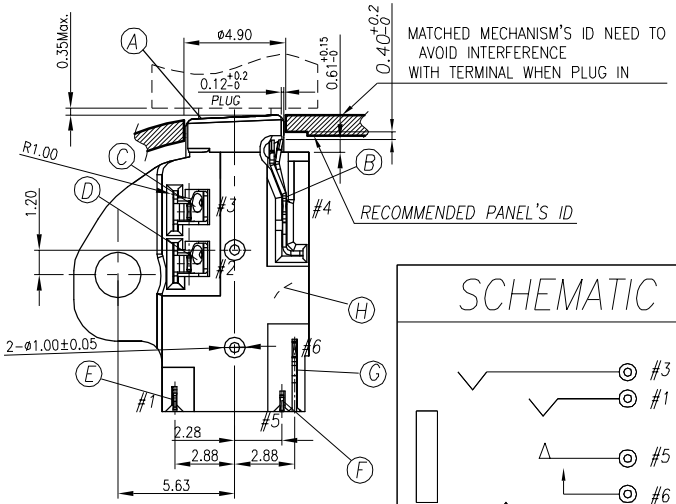

SCHEMATIC

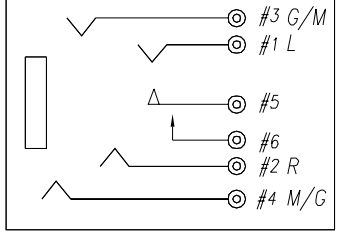

NO	DESCRIPTION	QTY	MATERIAL	PLATING & COLOR
H	SEPARATOR	1	HIGH TEMP.THERMOPLASTIC UL 94V-0	BLACK
G	MAKE TERMINAL	1	COPPER ALLOY, 0.2T	GOLD FLASH ON CONTACT AREA; GOLD FLASH ON SOLDER AREA; ALL OVER 50u" Ni.
F	TRANSFER TERMINAL	1	COPPER ALLOY, 0.2T	
E	TIP SPRING	1	COPPER ALLOY, 0.2T	GOLD FLASH ON CONTACT AREA; MATTE TIN 120u" ON SOLDER TAIL ALL OVER 50u" Ni.
D	RING A	1	COPPER ALLOY, 0.2T	GOLD FLASH ON CONTACT AREA; GOLD FLASH ON SOLDER AREA; ALL OVER 50u" Ni.
C	RING B	1	COPPER ALLOY, 0.2T	
B	EARTH	1	COPPER ALLOY, 0.2T	
A	BODY	1	PA4T+30% GF (TX1) UL 94V-0	PANTONE Cool gray 6C

UNLESS OTHERWISE SPECIFED TOLERANCES

DECIMALS: X :±0.5, X.X :±0.3, X.XX :±0.2

ANGLES: X :±2°, X.X :±1°

Singatron Enterprise Co., Ltd.
信音企業股份有限公司

TITLE	ø3.50 AUDIO JACK		
DWN	Qing	PART NO.2SJ3098-027111F	
CHKD	Bruce	SCALE 4:1	UNIT: mm
APVD	Liao	SIZE: A3	SHEET:1 OF 1 REV: A

CUSTOMER COPY

文件編號:RD-06-043-A